ENCONNEX

EdgeRack 5M
USER MANUAL

Legal Disclaimer

Copyright by ENCONNEX Co. Ltd

Notice

Enconnex is not responsible for damages to the unit or personal injury due to noncompliance with operation requirements as outlined in this document.

- This User Manual must be strictly complied with at the time of installation and throughout the life of the EdgeRack 5M and the integrated cooling unit.
- Operation of the cooling unit equipment must be completed by professionals who are familiar with this manual.
- Only technicians that have received professional training from Enconnex may service the system.
- Power to the EdgeRack 5M must be shut off if internal maintenance of the equipment is required.
- Warranty of the equipment is ensured only under the premise that the contents included in this manual are complied with.
- Parameters included in this manual are only to be used as a reference. Enconnex reserves the right to change the parameters without prior notice.
- In case of a lost, damaged, or misplaced manual, a replacement copy can be requested from the Enconnex website, www.enconnex.com.
- This appliance is not intended for use by persons (including children) with reduced physical, sensory or mental capabilities, or lack of experience and knowledge unless they have been given supervision or instruction concerning the use of the appliance by a person responsible for their safety.
- Children should be supervised to ensure that they do not play with the appliance.
- This appliance can be used by children aged 8 years and above and persons with reduced physical, sensory or mental capabilities or lack of experience and knowledge if they have been given supervision or instruction concerning the use of the appliance safely and understand the hazards involved. Children shall not play with the appliance. Cleaning and user maintenance shall not be performed by children without supervision.

- If the supply cord is damaged, it must be replaced by the manufacturer, its service agent, or similarly qualified persons to avoid a hazard.
- This equipment has been tested and found to comply with the limits for a Class A digital device, pursuant to part 15 of the FCC Rules. These limits are designed to provide reasonable protection against harmful interference when the equipment is operated in a commercial environment. This equipment generates, uses, and can radiate radio frequency energy and, if not installed and used in accordance with the instruction manual, may cause harmful interference to radio communications. Operation of this equipment in a residential area is likely to cause harmful interference in which case the user will be required to correct the interference at his own expense.

Enconnex LLC
Address: 4670 Aircenter Circle, Reno, NV 89502, USA
Website: www.enconnex.com
Customer service mailbox: sale@enconnex.com
Customer service number: +1 510 651 2205

Table of Contents

1. General Safety Precautions

1.1. Overview

Enconnex is not responsible for any of the following situations:

- Operation of equipment in adverse environments beyond the manual instructions.
- Any installation and operation environment beyond regulations of any relevant international standards.
- Altering of the product or changes in the software without prior approval.
- Failure to follow the product and manual's operational instructions and safety warnings. See the end of this manual for further details.
- Equipment damage caused by natural disasters.

1.2. Local Rules and Regulations

Local rules and regulations should be followed during equipment operation. Safety precautions in the manual serve as a supplementary guide to local safety specifications.

1.3. Basic Installation Requirements

Personnel performing the EdgeRack 5M and maintenance must receive authorized training.

- Equipment installation, operation, and maintenance can only be conducted by qualified and trained people.
- Replacing and changing equipment or components (including software) must be completed by professionals with Enconnex certification or authorization.
- Operators should immediately report faults or errors which may cause safety issues.

2. Product Overview

The EdgeRack 5M is engineered to solve networking problems common to many businesses across the globe.
It's suitable for both traditional and non-traditional IT environments, comes equipped with efficient cooling functionality, and is ready to be outfitted with all the technology required to run your business.
With its self-contained 5kW of cooling, electronic access controls, and robust design, the EdgeRack 5M is ideally suited for edge deployments in indoor, non-environmentally controlled areas.

2.1. Appearance

Figure 2-1 Appearance of EdgeRack 5M

2.2. Specifications

The Specifications for the EdgeRack 5M can be viewed in the following Table 2-1.
Table 2-1 Specifications

Part Number	ER5-X1242-DXXB
Input Power	208~240V, 1Ph, 50/60 Hz
Usable IT Space	31U
Rated Cooling capacity	5kW

Max. Input Current	16A
Max Load Capacity	4000 lb (1818 kg)
Cabinet Dimensions (H x W x D)	9.6'' x 23.6'' x 47.2'' (2022 mm x 600 mm x 1200 mm) 79.6'' x 31.5'' x 47.2'' (2022 mm x 800 mm x 1200 mm)
Net weight	ER5-61242-DXXB: 630 lb (286 kg)
	ER5-81242-DXXB: 681 lb (309 kg)
Shipping Weight	ER5-61242-DXXB: 886 lb (402 kg)
	ER5-81242-DXXB: 1003 lb (455 kg)
Noise Level	62 dB

NOTE:

- The rated cooling capacity of 5kW is measured under the conditions of ambient temperature 95℉ (35℃) and supply air temperature 70℉ (21℃).

Figure 2-2 Cabinet Dimension

2.3. Components

The EdgeRack 5M product mainly includes a cabinet structure and cooling unit, The system components are shown in Figure 2-3 and Table 2-3

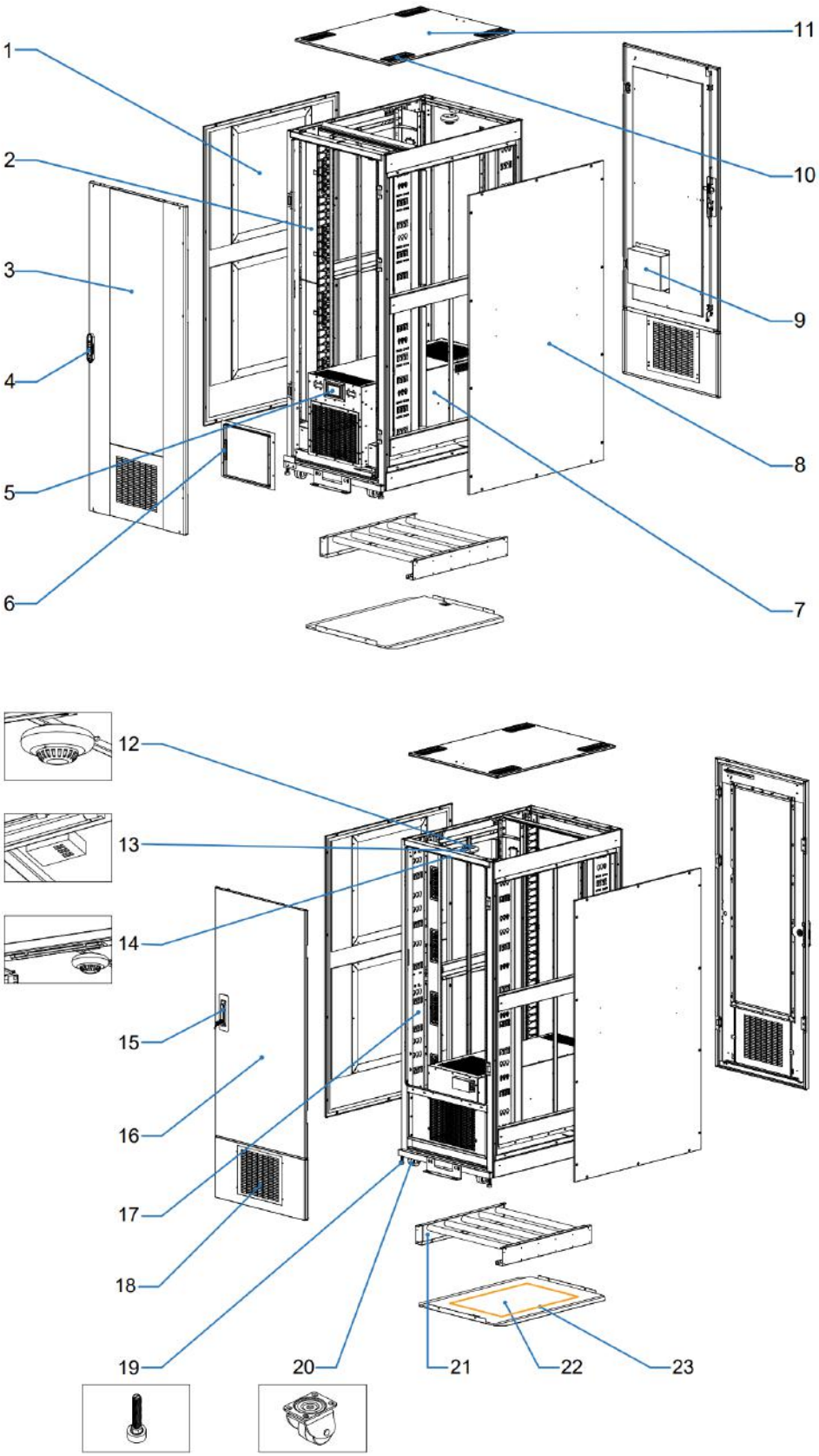

Figure 2-3 Components of Cabinet

Table 2-3 EdgeRack 5M Main components

No.	Component Name	Functions
1	Cabinet left side panel	Isolate the inside and outside of the cabinet to protect the equipment inside.
2	Cable management	Facilitate cable arrangement in the cabinet. (For the 800mm wide cabinet , equipped with short fingers, lashing panel and hinged coer. For the 600mm wide cabinet, equipped with universal cable lashing panel .)
3	Front door	Isolate the inside and outside of the cabinet to protect the equipment inside.
4	Access control(Front)	This provides safety protection installed on the front door.
5	HMI	The touch-screen HMI monitors, controls, and alarms all of the components, including pressure sensors, fans, temperature and humidity sensors, door, water leakage, smoke, and other dry contacts. All information can be remotely monitored via the network. For details, please refer to the chapter on the management system.
6	Sealing flange	Isolate the ambient air inlet of the cooling unit and cold aisle of the cabinet.
7	Cooling unit	The cooling unit cools the critical load equipment with a stable temperature.
8	Cabinet right-side panel	Isolate the inside and outside of the cabinet to protect the equipment inside.
9	Electrical control box	Includes water leakage controller and control terminals.
10	Grommet	Install it in the cable hole at the top of the cabinet for cable sealing at the top.
11	Top panel	Isolate the inside and outside of the cabinet to protect the equipment inside.
12	Smoke sensor	The smoke sensor alerts when a potential fire risk is detected.
13	Temperature & Humidity sensor	Detects the temperature and humidity of the hot air in the return air side.
14	LED light	Provides good visibility when the front door opens.
15	Access Control (Rear Door)	This provides safety protection installed on the rear door.
16	Rear door	Isolate the inside and outside of the cabinet to protect the equipment inside.

17	PDU bar	For PDU mounting.
18	Rear Lower Pane	Removable for installation of exhaust air duct.
19	Leveling Feet	The feet are adjustable for installation on slightly uneven floors.
20	Casters	The installed casters provide for easy maneuverability.
21	Roller assembly	It is installed at the bottom of the cabinet for easy disassembly and assembly of the cooling unit.
22	Bottom panel	Isolate the inside and outside of the cabinet to protect the equipment inside.
23	Water leakage sensor	Located at the bottom of the cabinet to detect the water leakage.

2.3.1. Cooling unit

Self-contained cooling unit with 5kW of cooling capacity, adopt a frequency conversion refrigeration system, which can adjust the cooling capacity according to the real IT load in the cabinet. It also has an integrated condensate water processing device, eliminating the need to connect a drainpipe for daily use.

- **Cooling Performance**

Figure 2-4 shows the EdgeRack 5M cooling performance curve. It is the full-load performance data that defines the variations of cooling capacity to different ambient temperatures and supply air temperature. Users can select and install appropriate IT loads according to the ambient temperature and air supply control temperature.

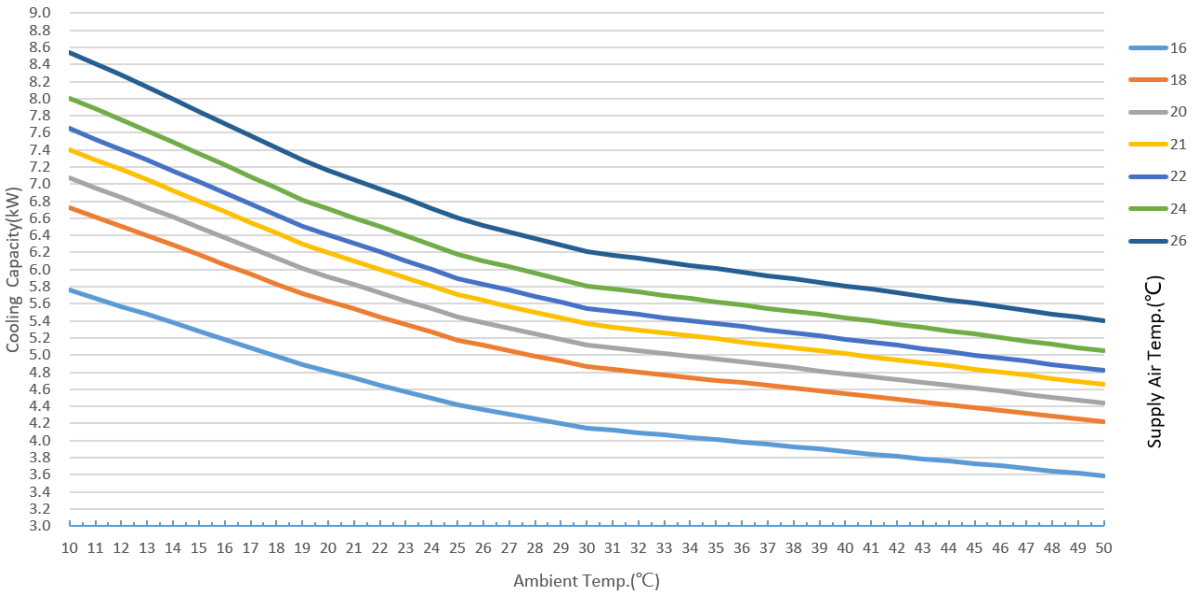

Figure 2-4 Cooling Performance Curve

- **Cooling System layout**

  The cooling unit includes an evaporator, condenser, evaporating fan, condensing fan, compressor, electronic expansion valve, filter drier, temperature sensor and pressure sensor, etc.

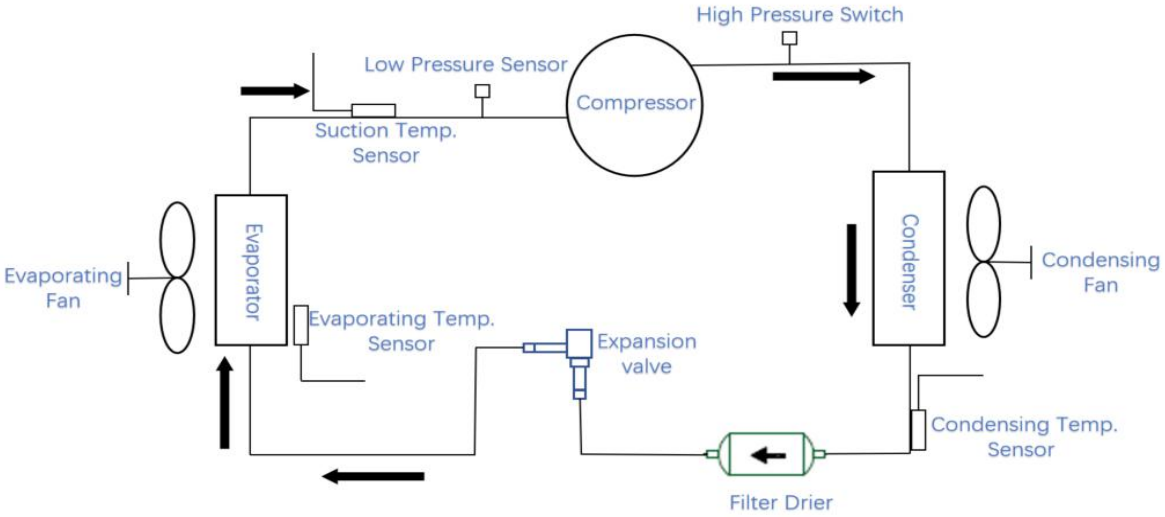

Figure 2-5 Cooling System layout

- **Air Circulation**

  The air circulation of the cabinet is shown in Figure 2-6 and Figure 2-7.

  Internal Air Circulation: Cooled supply air from the cooling unit to cool the IT equipment. The heat from the return air is absorbed and then goes back to the cooling unit.

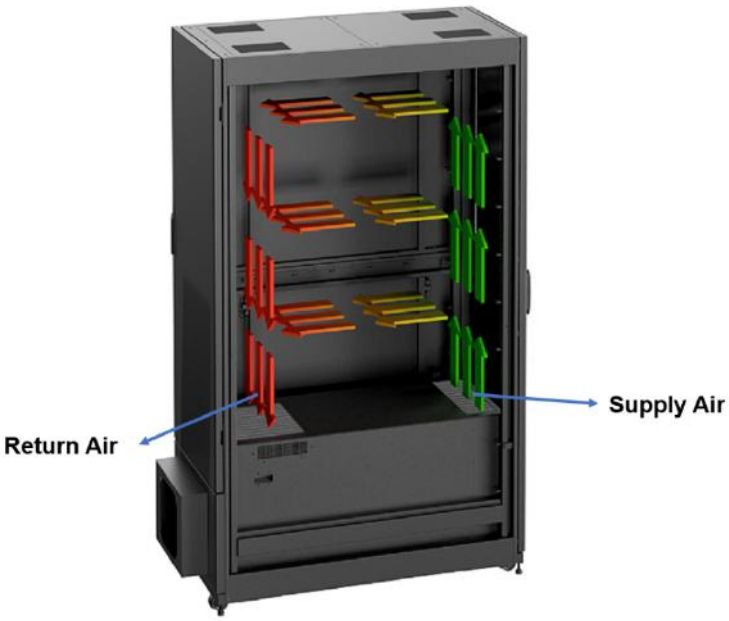

Figure 2-6 Internal air circulation

External Air Circulation: Ambient air is drawn into the cooling unit through the front for heat exchanging then exhausted outside the cooling unit from the rear.

Figure 2-7 External Air Circulation

2.3.2. Condensate Water Processing Device

The built-in condensate water processing device prevents excess water condensate from accumulating within the enclosure. As condensate enters the water tray, it is passed down piping to the condensate water processing device, which is heated and converted to steam.

The condensing fan drains steam out of the cabinet.

Figure 2-8 Condensate Water processing device schematic

NOTE: The EdgeRack 5M is equipped with a drain valve and a drainpipe, which are used when the ambient humidity is extremely high, or the condensate water processing device fails. For details, see section 6.3 Maintenance.

2.3.3. LED Light

The LED light belt is installed in the front and back of the cabinet. When the cabinet front door is opened, the light will automatically turn on and turn off automatically when the front door is closed.

Figure 2-9 LED light

2.3.4. Smoke Sensor

The smoke sensor is installed at the rear top of the cabinet. If smoke inside the cabinet reaches the alarm value, the red indicator light of the smoke sensor turns on, and the HMI activates the smoke alarm. When the smoke disappears, the alarm indicator automatically returns to normal and the alarm on the HMI screen is cleared

automatically.

Figure 2-10 Smoke Sensor

2.3.5. Temperature & Humidity Sensor

The temperature & humidity sensor is placed in the rear side of the cabinet to detect the temperature and humidity. When the detected temperature is higher than the high-temperature alarm threshold, the HMI generates an alarm and controls the door action.

Figure 2-11 Temperature & Humidity Sensor

2.3.6. Water Leakage Sensor

The water leakage detection cable is located at the bottom of the cabinet. When water leakage is detected, the HMI activates the alarm.

Figure 2-12 Water Leakage Sensor

2.3.7. Access Control

The EdgeRack 5M has two access controls, the front door with Auto-Opening Electronic Locks, and the rear door with Swing Handle Keyed Locks.

- **Auto-Opening Electronic Locks（Front door）**

The Auto-Opening Electronic Locks have four ways of unlocking, fingerprint, swipe card,

password.

Figure 2-13 Auto-Opening Electronic Locks

Password: Input the password in the lock panel, the lock indicator turns green, and the door opens.

Figure 2-14 Input the password

Fingerprint: Placing your fingerprint on the lock opens the door.

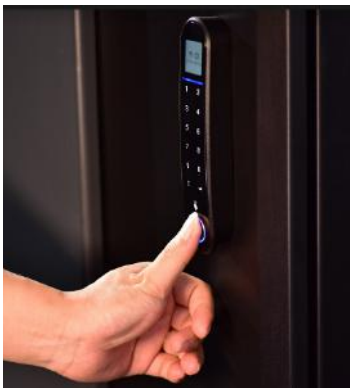

Figure 2-15 Enter the fingerprint

Card: Swipe the card on the lock sensor, the door lock indicator turns green, and the door opens.

Figure 2-16 Swipe the card

- **Swing Handle Keyed Locks**
  The Swing Handle Keyed Locks can only be opened by inserting and turning the key and rotating the handle.

Figure 2-17 Swing Handle Keyed Locks

2.4. Environmental requirements

2.4.1. Operating conditions

The EdgeRack 5M installation location should be easily accessible, away from heat, direct sunlight, and corrosive gasses. Operating conditions are shown in Table 2-4.

Table 2-4 Operating conditions

Items	Requirement
Temperature	-14℉~113℉ (-10℃～45℃)
Humidity	20%～80%

Altitude	Altitude <39370'' (1000 m) , above 39370'' (1000 m) derating capacity, power derating 6% per kilometer
Rated voltage	208V~240V, 1Ph, 50Hz and 60Hz

Note

- During operation in high temperature and high humidity environments, there may be condensation on the external surface of the front glass door. However, it is a normal phenomenon and doesn't affect operations or usage.
- Derating is required for altitudes above 39370'' (1000 m).

2.4.2. Storage Environment

Table 2-5 Storage Environment

Items	Requirement
Environment	Clean (no dust), suitable ventilation
Environment Temperature	-22 ℉～140 ℉ (-30℃～60℃)
Environment humidity	5%RH～95%RH without condensation

2.5. Required Spacing

There must be sufficient space for installation, service, and maintenance of the EdgeRack 5M. The figure below shows the area required on the front and rear sides of the EdgeRack 5M.

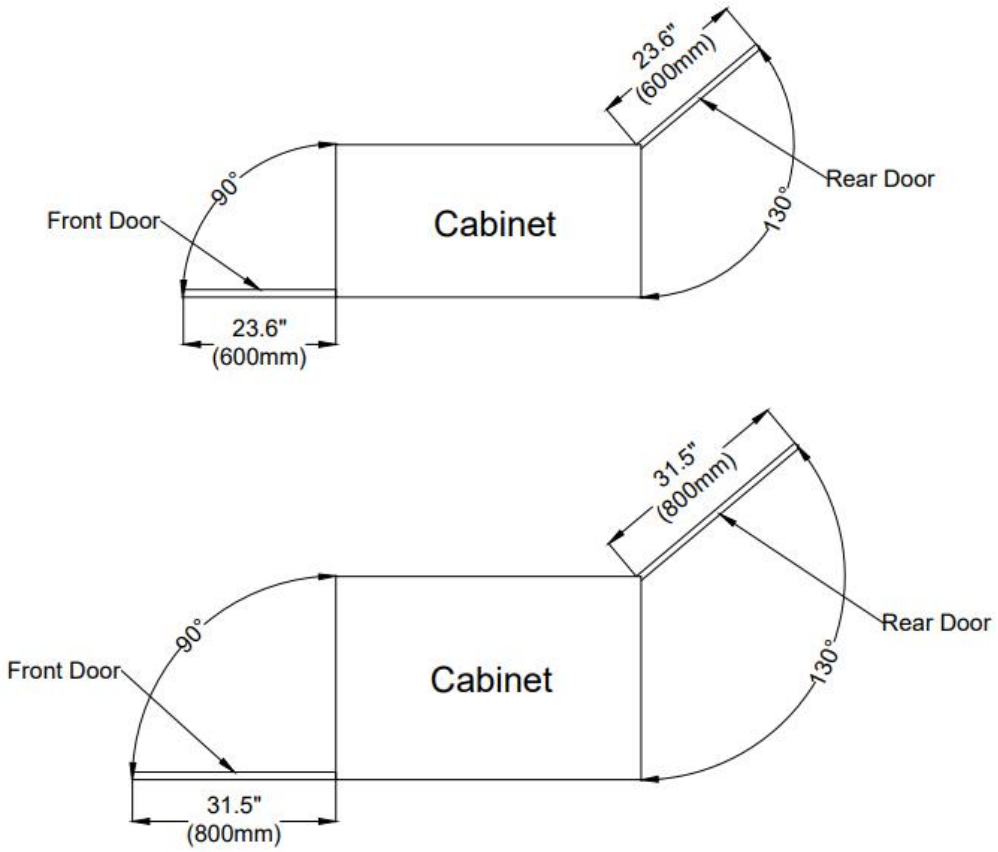

Figure 2-18 Space required for the rear doors and the front door

EdgeRack 5M space requirements inside the room where it is to be installed are mentioned in the figure below.

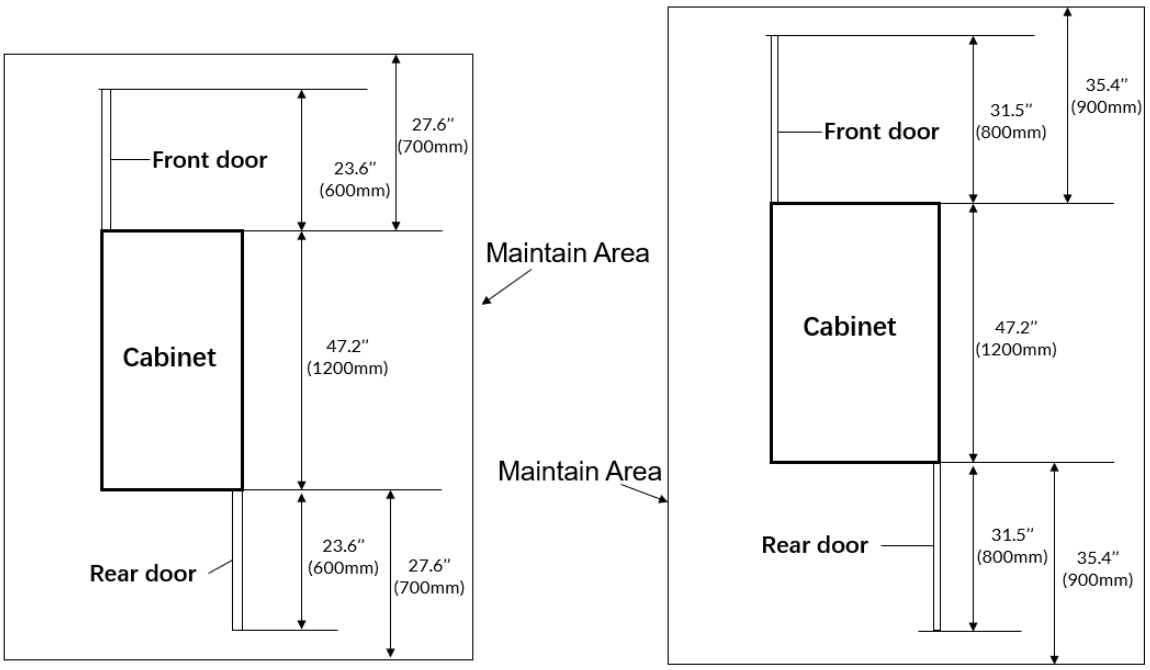

Figure 2-19 Space requirements

2.6. Weight Load

When loaded with equipment, the EdgeRack 5M can be quite heavy. Ensure the installation site's floor's weight-bearing capacity is adequate.

Note

For assistance in calculating the total weight of an EdgeRack, consult the Enconnex team.

3. Installation

3.1. Installation Instructions

Please install the equipment in strict accordance with these requirements to achieve the best operation and longest lifetime.

- Before installation, ensure that the installation environment complies with the requirements and that the building is suitable for electrical wiring and air duct construction.
- The installation shall strictly follow the design drawings with maintenance space reserved.

Note

- Ensure the installation location is capable of supporting the total weight of a fully-loaded EdgeRack 5M.
- To ensure proper airflow, prepare to use blanking panels on the front in RU spaces not occupied by IT equipment.
- It is recommended that the EdgeRack 5M be installed in a room that does not have employees working on a continual basis.

3.1.1. Tools

Table 3-1 shows the usual tools used during the installation process.

Table 3-1 Install Tools

Name	Drawing	Name	Drawing
Level	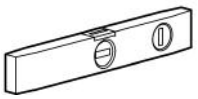	Philips screwdriver	
Stepladder		Electric drill	
Electric Forklift		Hand Pallet Truck	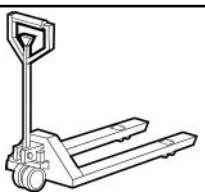

3.1.2. Accessories

Figure 3-1 Accessories

Table 3-2 Accessories

No.	Product Name	Quantity
1	Air duct 236.2'' x Φ9.8'' (6m x Φ250mm)	1pcs
2	Duct clamp	1pcs
3	Air duct mounting assembly	1set
4	Cable Tie (5*150)	30pcs
5	Anti-theft Screwdriver bit	1pcs
6	Audible and Visual Alarm (Option)	1pcs

7	M4X10 flat head screw	10pcs
8	Cage-nuts M6	50pcs
9	M6X16 Phillips Pan	50pcs
10	Washer M6 Black Plastic Cup	50pcs
11	Install handle for cabinet side panel	4pcs
12	M5 X 8 Phillips Pan	22pcs

3.1.3. Self-Prepared Materials

Please prepare the below materials before operating the unit.

Table 3-3 Self-Prepared Materials

Parts	Specifications
Plug	EU: 1 * IEC30916 (16A) US: 1 * L6-20P (20A)
Power wire cable	3*12AWG

3.2. Equipment transportation, unpacking, inspection

3.2.1. Transportation & Movement

Take precautions during transport and handling to ensure the cooling unit and associated controls in the EdgeRack 5M don't undergo sudden drops or impacts.

The shipping crate and packaging are shown in Figure 3-2.

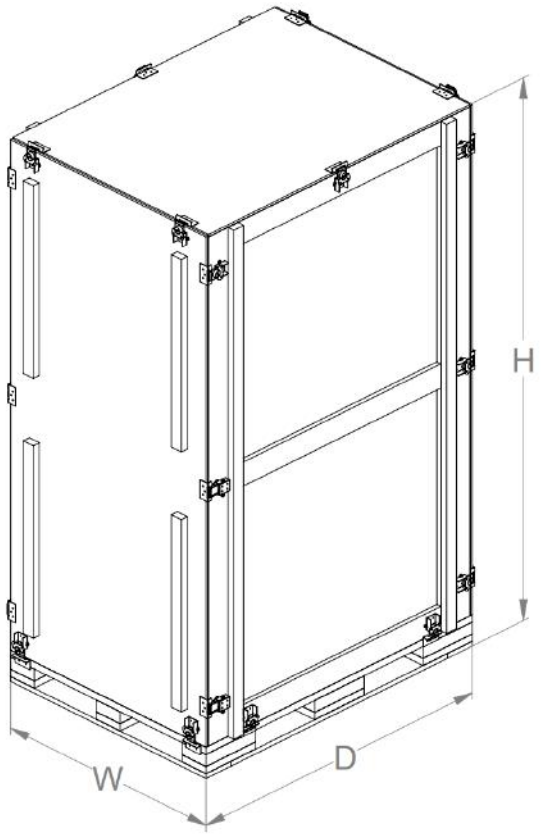

Figure 3-2 Shipping Crate with Parts Included

Table 3-4 Shipping Dimensions of the unit

Part Number	Package	Shipping Dimension			Shipping Weight
		W	D	H	
ER5-61242-DXXB	Wooden	33.5" (850mm)	55.5" (1410mm)	88.8" (2255mm)	86lb (402kg)
ER5-81242-DXXB	Wooden	41.3" (1050mm)	55.5" (1410mm)	88.8" (2255mm)	1003lb (455kg)

Due to the EdgeRack 5M's weight, a hand pallet truck or electric forklift is needed for unloading and transportation.

Figure 3-3 shows the schematic diagram of a hand pallet truck and an electric forklift.

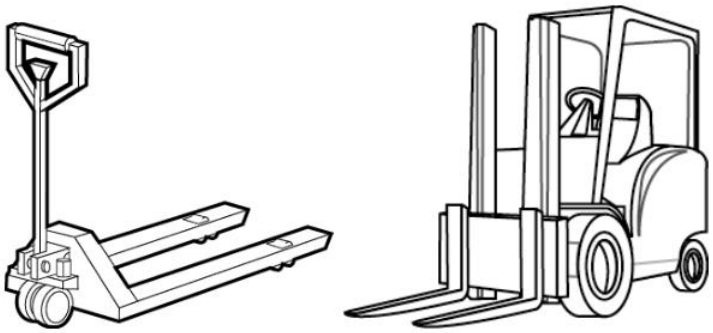

Figure 3-3 Hand Pallet Truck & an Electric Forklift

When using a hand pallet truck or an electric forklift truck, the forks of the hand pallet or electric forklift must be aligned with the center of gravity to prevent the package from toppling or falling over, as shown in Figure 3-4.

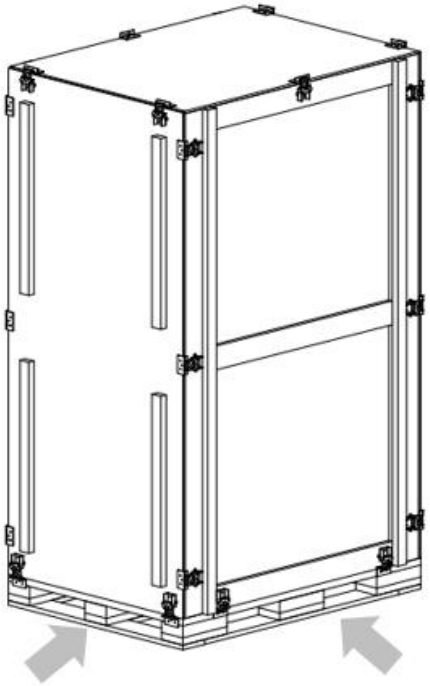

Figure 3-4 Forklift Direction

During transportation and installation, the equipment should not be excessively jolted or tipped to prevent pipes from being damaged and refrigerant from leaking.

Warning:

- After transportation, like any refrigerant system, you must keep it in its final location for some hours before starting up.
- Transportation inclination shall not exceed 15 °. Stay for at least 8 hours before starting up if it has to be inclined to exceed 15 °.

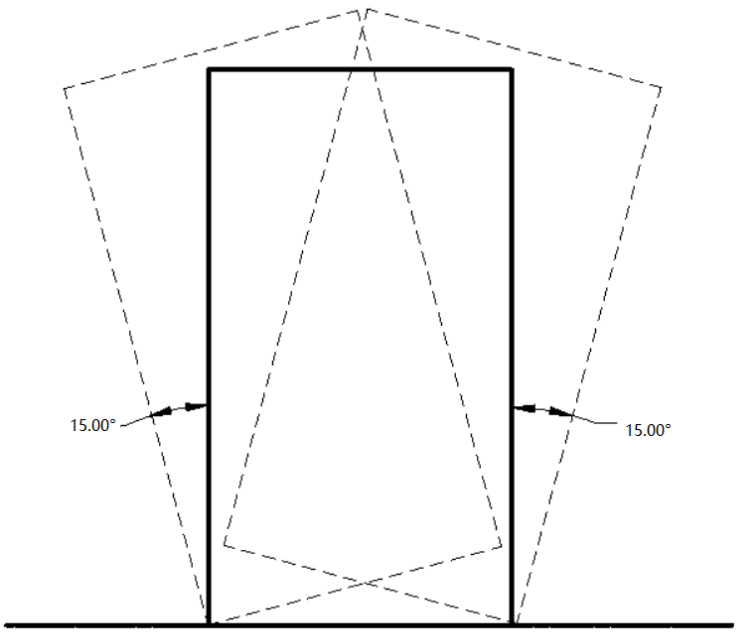

Figure 3-5 Carrying obliquity

Note

- Ensure the equipment stands upright.
- While using the forklift or the hand pallet truck, ensure that the fork arms (if adjustable and flexible) open to the greatest extent, ensuring that the fork arms can be placed under the pallet of the equipment in a precise manner.
- Ensure that the length of the fork arms matches the equipment.
- Use mechanical handling tools such as forklifts or pallet jacks during the unloading and moving process. Place the unit in the middle to guarantee symmetry. It is important to move slowly and carefully to prevent dents and scratches to the equipment.
- Check the quantity and type of accessories according to the packing list. In case of missing accessories or nonconformity of models, please keep field records and immediately contact the Enconnex Customer Service Center or representative.
- Be careful when moving the EdgeRack 5M after it has been operating. The condensation tank may contain some water that must be drained before moving the EdgeRack 5M. Take similar steps after moving the EdgeRack 5M as it was taken during the initial installation.

3.2.2. Unpacking

Packing materials of the cabinet are reusable. Keep the packing materials for further use or dispose of them appropriately per the protocols and local regulations.

Please follow the steps and procedures below to unpack.

a) Place the cabinet on an open field as shown in Figure 3-6.

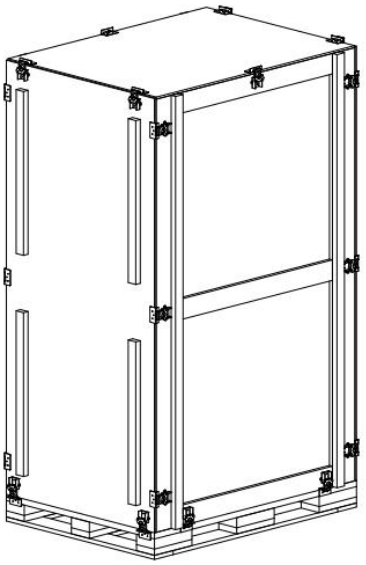

Figure 3-6 EdgeRack 5M pack

b) Release the toggle latch and remove the surrounding planks as shown in Figure 3-7.

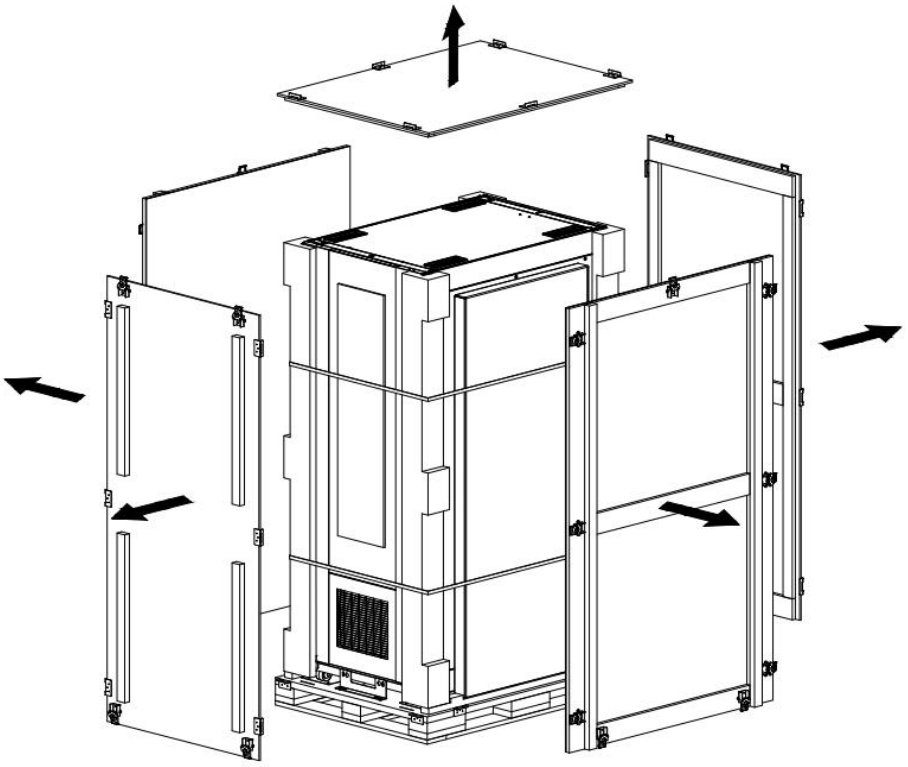

Figure 3-7 Remove the surrounding planks

c) Cut off the packing tape, take out the accessory pack and remove the EPE polyethylene foam as shown in Figure 3-8.

Note: Pay attention to the weight of the accessory pack to prevent it from falling over, so as to avoid personal injury!!!

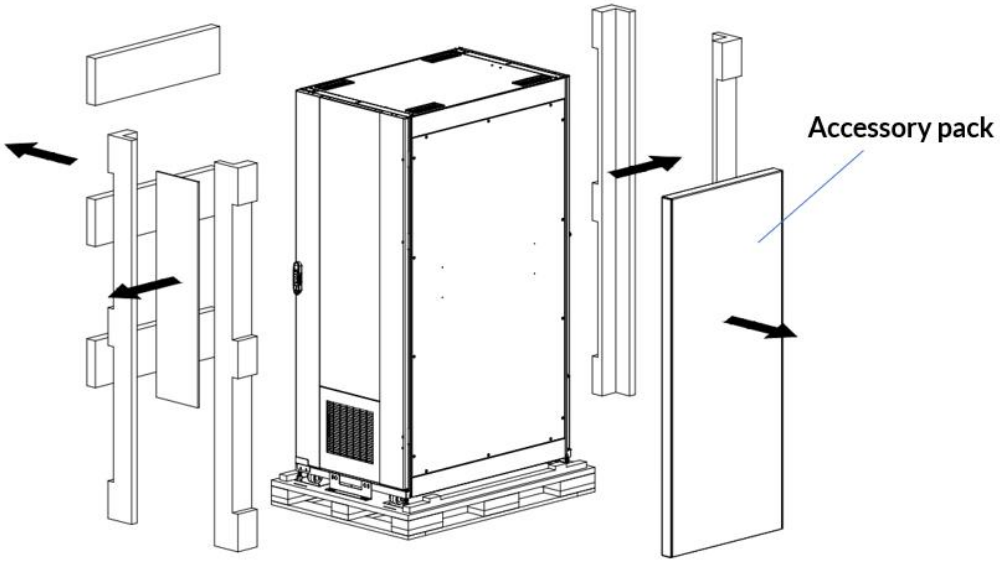

Figure 3-8 Remove the accessory pack

d) Open the accessory pack, take out the ramp and attach the spacer as shown in Figure 3-9.

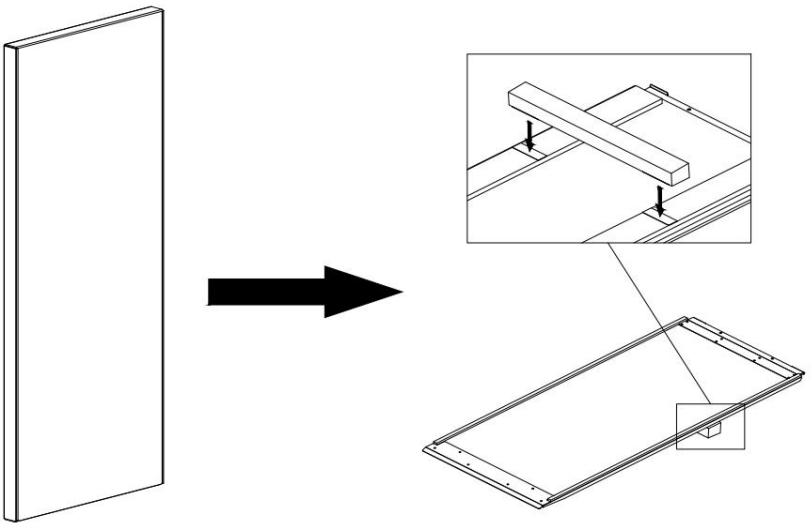

Figure 3-9 Assembly the ramp

e) Hang the hooks on the ramp to the pallet as shown in Figure 3-10.

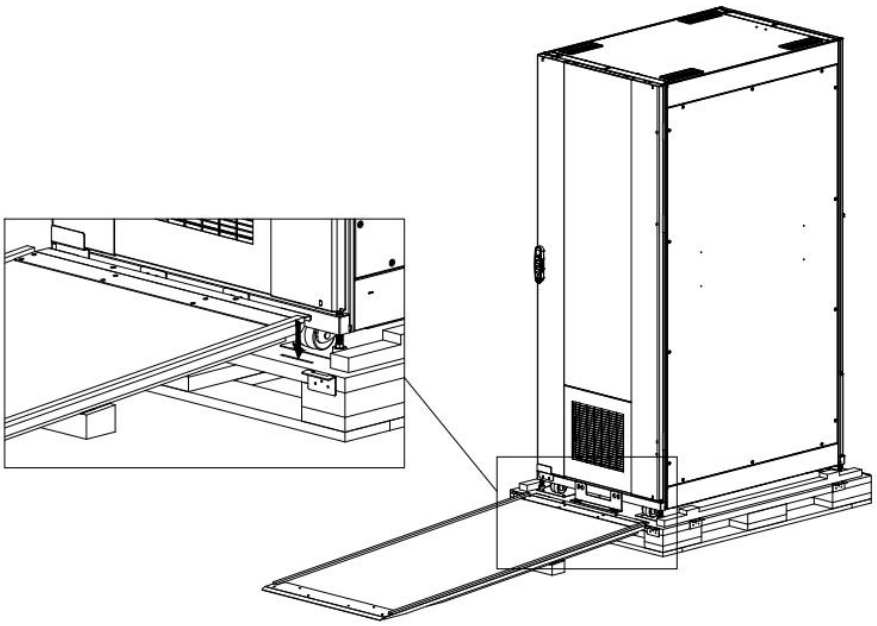

Figure 3-10 Mounting the ramp to the wooden pallet

f) Remove the L brackets at the bottom of the front and rear ends of the cabinet as shown in Figure 3-11.

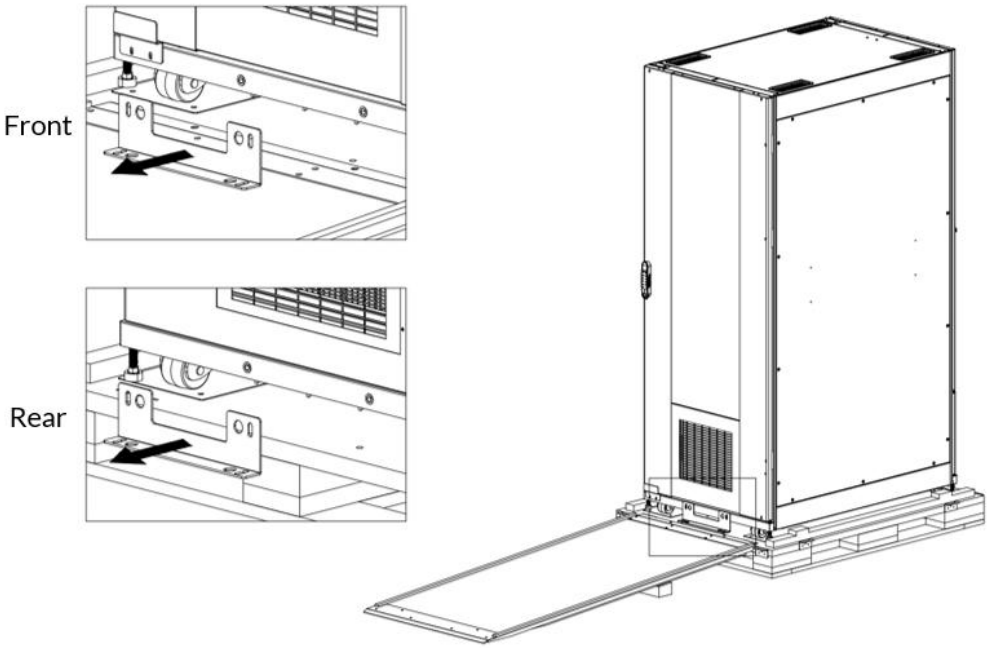

Figure 3-11 Remove the L brackets

g) Carefully roll the cabinet off the pallet as shown in Figure 3-12.

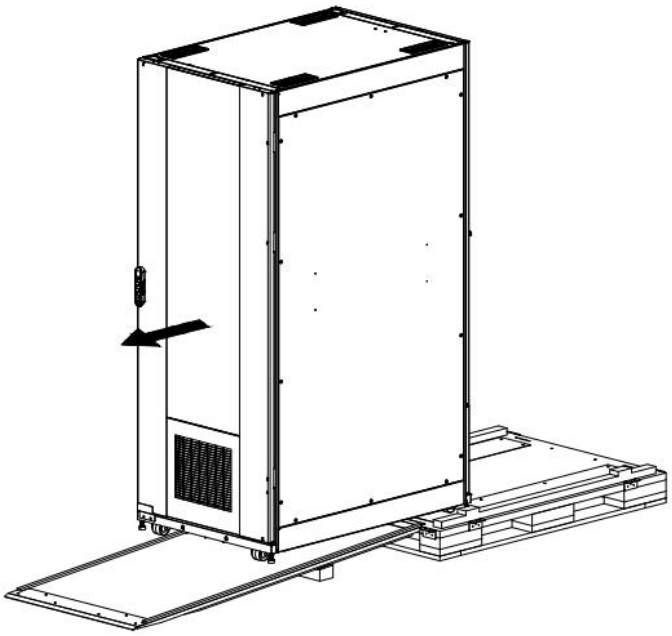

Figure 3-12 Carefully guide the cabinet down the ramp

h) Remove the fixing bracket at the bottom of the front door as shown in Figure 3-13.

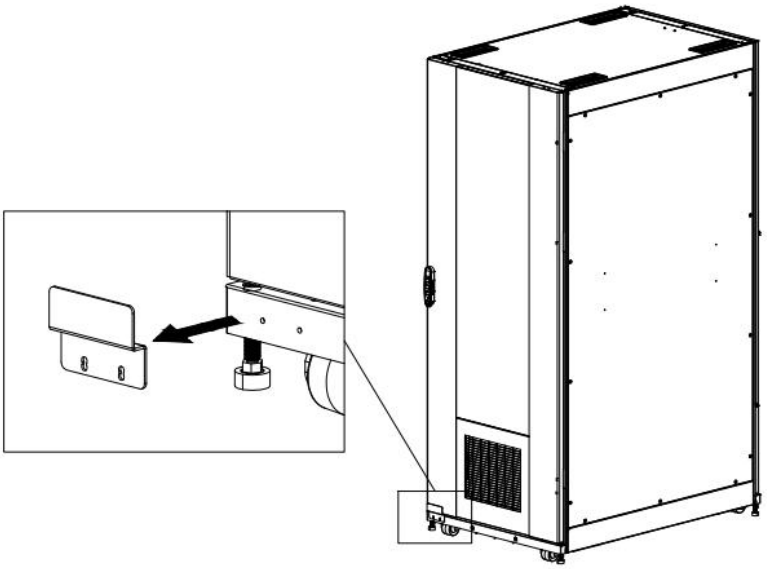

Figure 3-13 Remove the fixing bracket

3.2.3. Leveling Feet

Lower the leveling feet to remove the weight of the cabinet off of the casters. Using a level or measuring tape, adjust each leveling foot until the cabinet is leveled. Tighten the hex nuts at each leveling foot to secure.

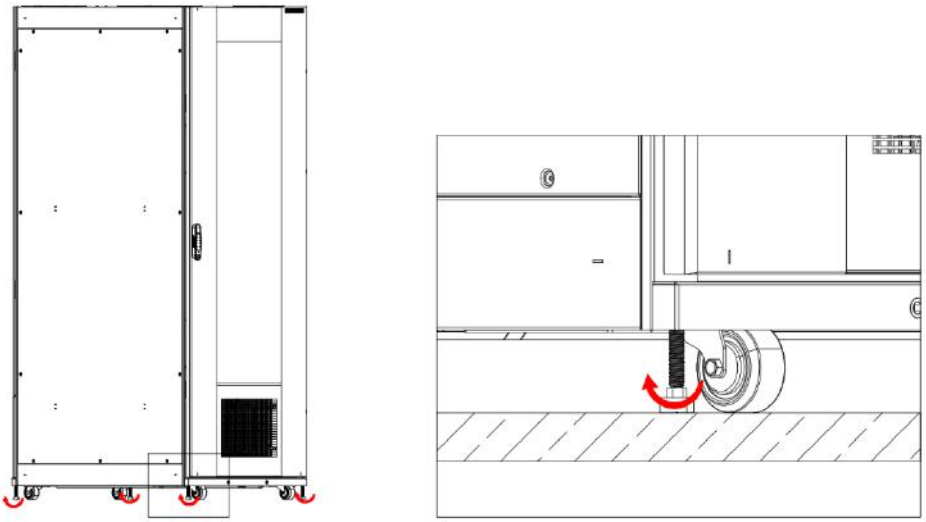

Figure 3-14 Adjustable leveling feet

3.2.4. Installation of air duct

It is recommended that the air duct at the rear of the EdgeRack 5M be plumbed into the main HVAC return. A flexible tube 6M x Φ250 mm) is included.

a) Remove the rear lower panel of the cabinet.

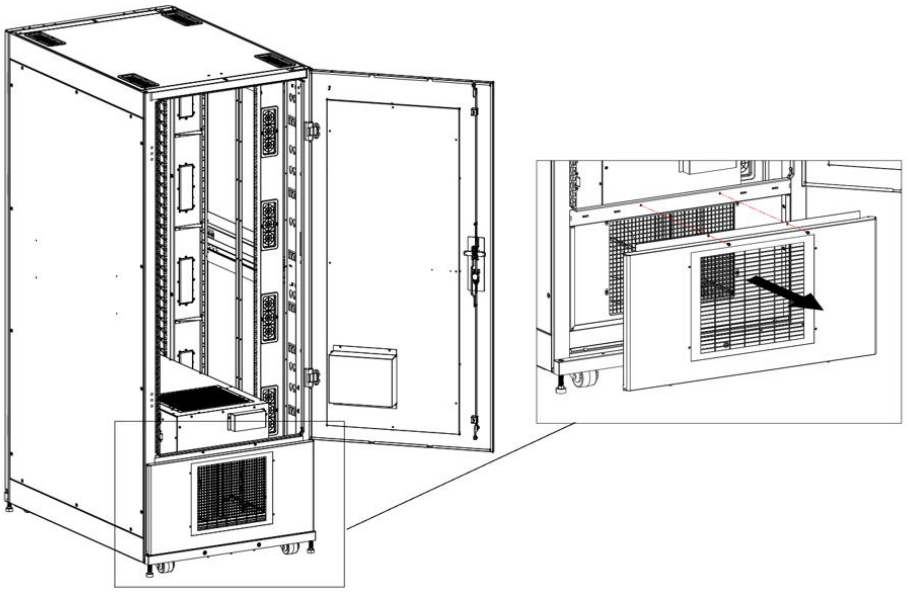

Figure 3-15 Remove rear lower panel

b) Remove the grille from the rear lower panel.

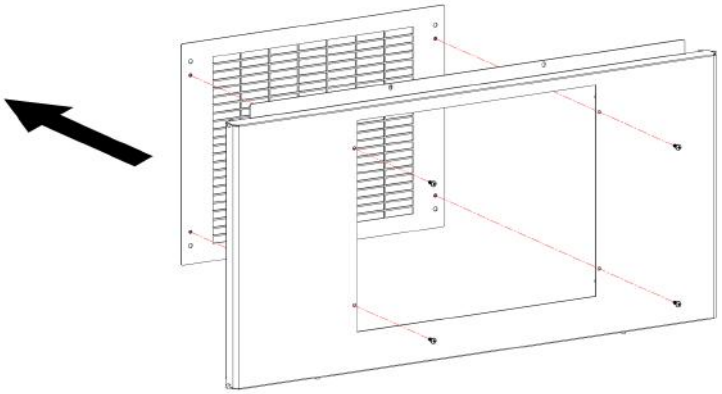

Figure 3-16 Remove the grille

c) Install the air duct mounting subassembly on the rear lower panel.

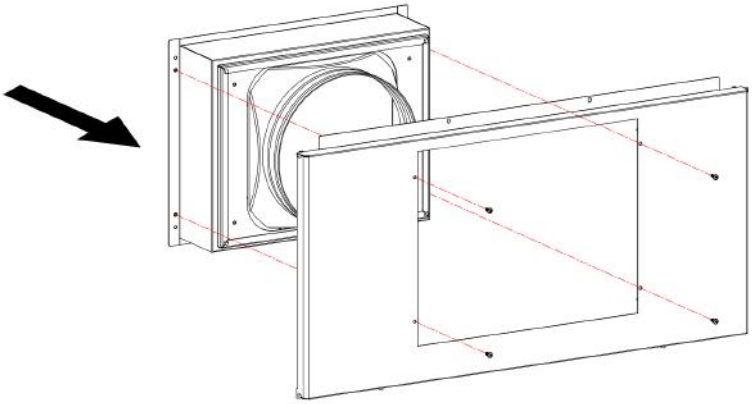

Figure 3-17 Install the air mounting subassembly

d) Install the rear lower panel on the cabinet.

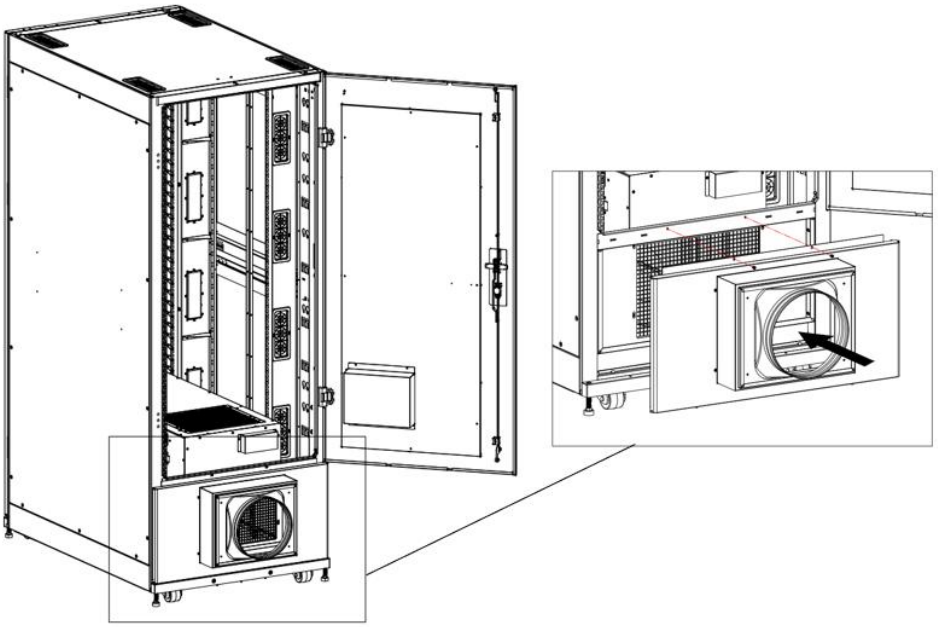

Figure 3-18 Install the rear lower panel

e) Place a duct clamp over the air duct mounting flange.

f) Install the air duct over the mounting flange and tighten the duct clamp.

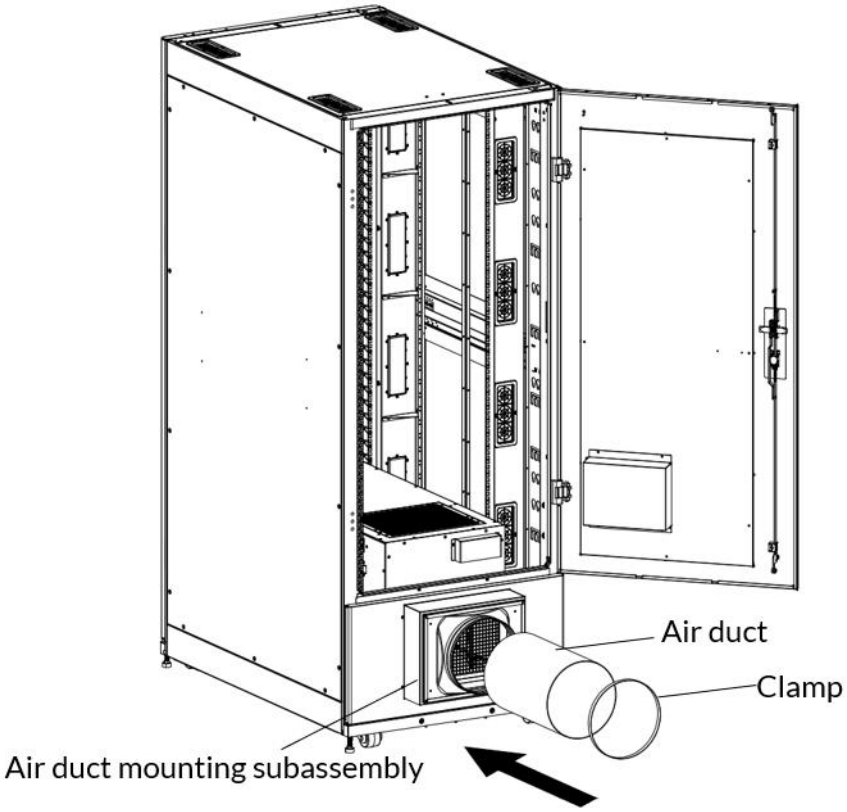

Figure 3-19 Air duct installation diagram

NOTE:

- The use of the included air duct is optional and depends on site conditions and user preference.
- Please refer to section 3.1.2. for a list of accessories.

3.2.5. Connect the power cable

- Open the cover of the electric box at the rear of the cooling unit, and connect the power cable to the power terminal.
- Connect single-phase power supply, L + N + PE, plug input current 16A or 20A.

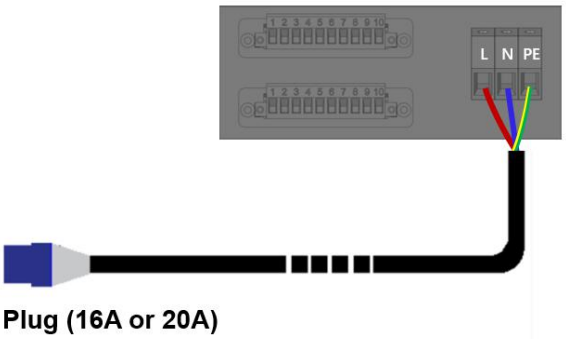

Figure 3-20 Connect the power supply of the cabinet

Table 3-5 Power cable

No.	Symbol	Description
1	L	Live wire
2	N	Neutral wire
3	PE	Earth wire

3.2.6. Connect the Audible and Visual Alarm（Optional)

The wiring terminal (**Green 2P**) is at the rear of the cabinet, as shown in Figure 3-2

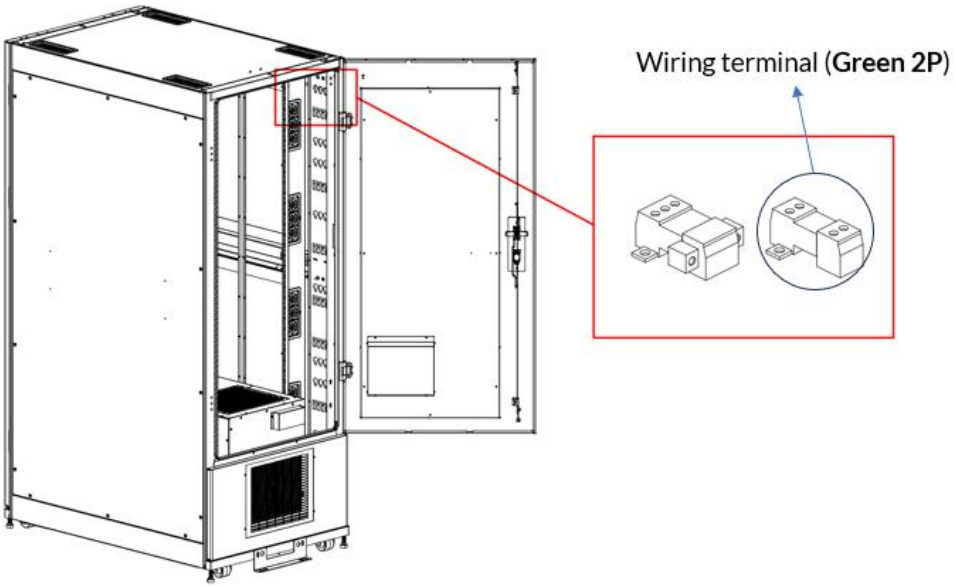

Figure 3-21 Terminals position diagram

The reserved terminals are detachable. Connect the cable of the audible and visual alarm to the terminal and tighten.

The wire length of the audible and visual alarm is 380mm.

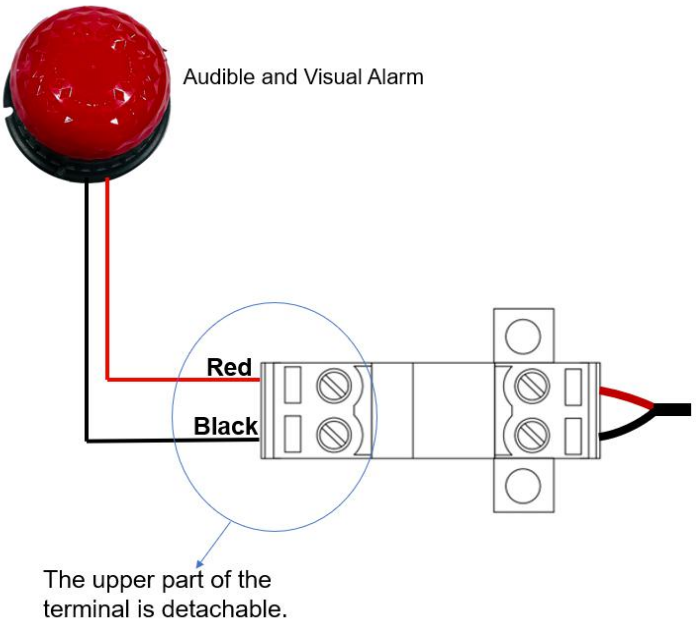

Figure 3-22 Connection diagram

Table 3-6 Audible and Visual Alarm Wiring

No.	Wire Color	Description
1	Red	Positive,12V
2	Black	Negative, GND

4. Commissioning

After the installation, please follow the procedure below to commission the unit.

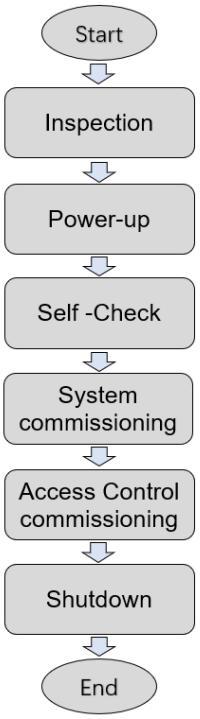

Figure 4-1 Commissioning procedure

4.1. Inspection

Overview

- Please follow the power supply listed in the nameplate.
- All connections are correct and tight.

Before operation, please check the status of every unit according to table 4-1.

Table 4-1 Checklist

Inspection Items	Checking details and requests.
Unit appearance.	Appearance without damage, surface is clean, insulation is in good condition.
Power cord	Power supply connection should not be loose. Measure and record the voltage value before starting up the unit.
Electric control box	The electrical components in the control box are good.
Cooling unit	No blocked air inlet and air outlet spot.

4.2. Power-up procedure

Plug the EdgeRack 5M power plug into the live socket.

4.3. Self-Check

The cooling automatically enters self-check mode after power on.

- Evaporating fan start-up reaches 100%.
- Condensing fan starts at 100%.
- After starting the compressor, keep it running at about 2000 RPM.
- Stop the Self-Check after 3 minutes of operation.
- According to the refrigeration demand, the cooling is automatically controlled.

4.4. System commissioning

After powering on, the default display interface is shown on the HMI, as shown in Figure 4-2.

Figure 4-2 HMI Home page

Click "User Setting" on the home page to enter the user setting page, as shown in Figure 4-3.

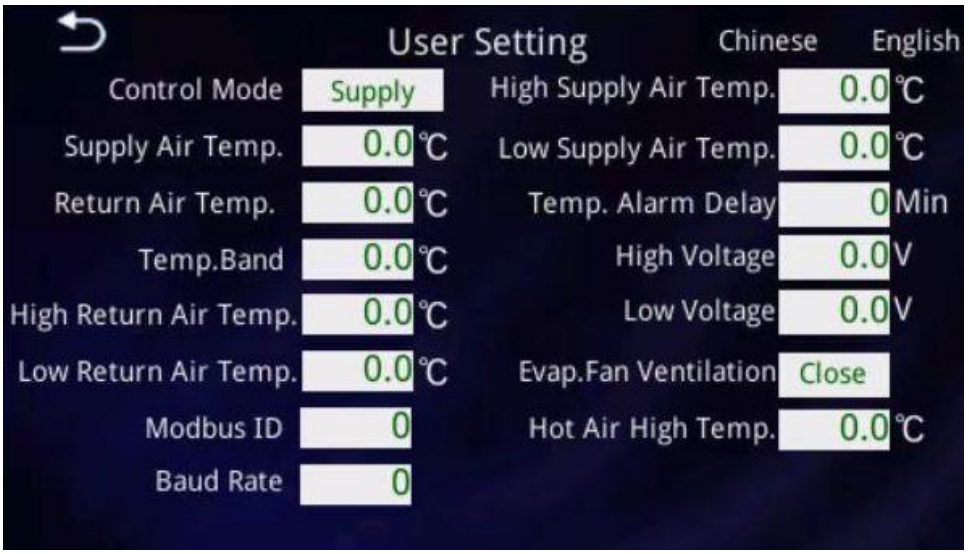

Figure 4-3 User Setting page

For "Control mode", it can be set to "Return" or "Supply" as required.
For other recommended set values, refer to Table 4-2.

Table 4-2 Recommended Settings

Items	Setting range	Default settings	Recommended Settings
Supply Air Temp.	54~122℉ (12~50℃)	70℉ (21℃)	70~81℉ (21~27℃)
Return Air Temp.	64~122℉ (18-50℃)	95℉ (37℃)	91~106℉ (33~41℃)
Temp. Band	36~59℉ (2~15℃)	37℉ (2.5℃)	36~43℉ (2~6℃)
High Return Air temp.	86~194℉ (30~90℃)	122℉ (50℃)	108~122℉ (42~50℃)
Low Return Air temp.	-44~77℉ (-42~25℃)	50℉ (10℃)	41~64℉ (5~18℃)
Modbus ID	1~255	1	1
Baud rate	4800~19200	9600	9600
High Supply Air Temp.	72~194℉ (22~90℃)	86℉ (30℃)	82~90℉ (28~32℃)
Low Supply Air Temp.	-44~68℉ (-42~20℃)	50℉ (10℃)	48~59℉ (9~15℃)
Temp. Alarm delay	0~120 mins	20mins	20mins
High Voltage	240~300V	253V	253V
Low Voltage	150~200V	187V	187V
Evap.Fan Ventilation	Open / Close	Open	Open
Hot Air High Temp.	86~194℉ (30~90℃)	122℉ (50℃)	113~122℉ (45~50℃)

4.5. Access Control Commissioning

For the EdgeRack 5M with Auto-Opening Electronic Locks, users need to set the access control.
The default password is **654321**.

a. **Programming cord setting**（The default PR code: 123456）

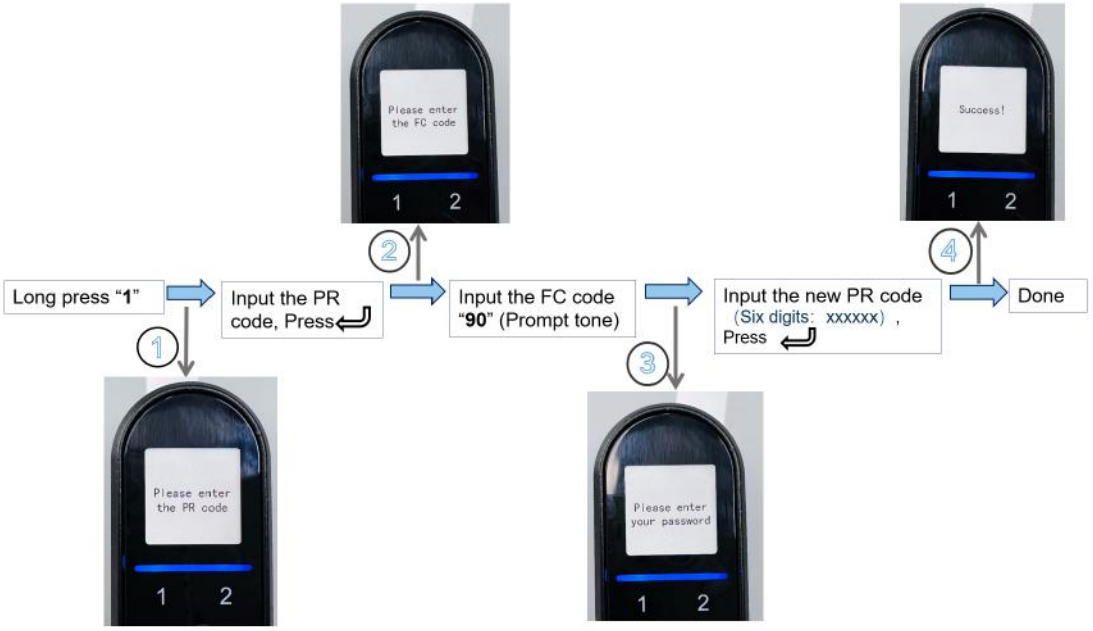

Figure 4-4 Programming cord setting

b. **Unlock time setting** (The default unlock time is 7 seconds)

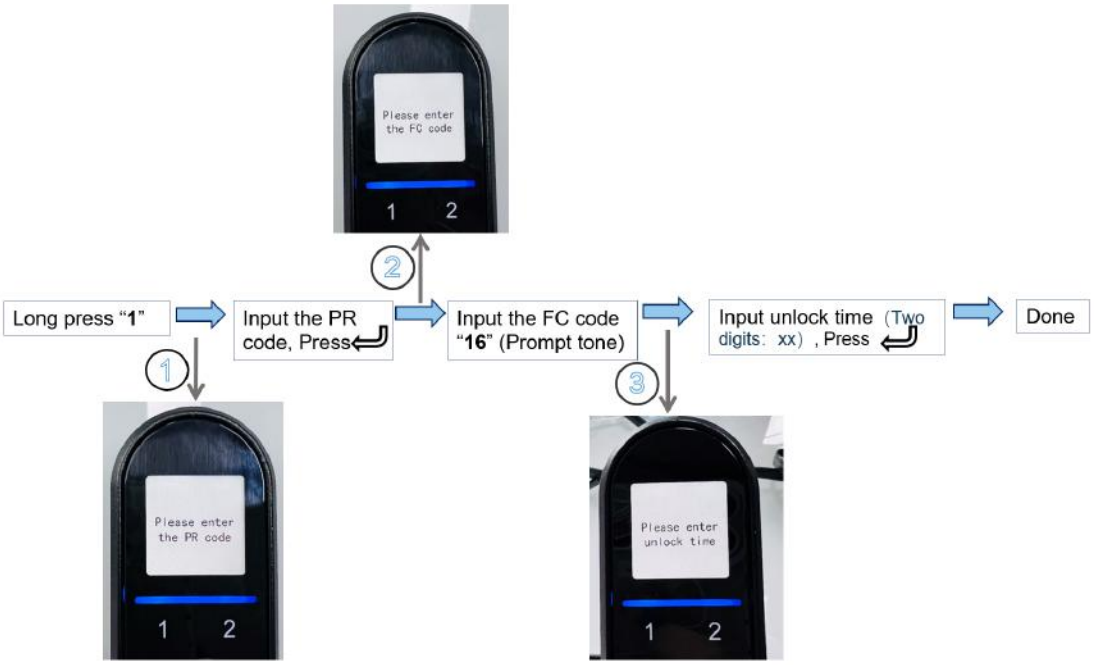

Figure 4-5 Unlock time setting

c. **Add password**

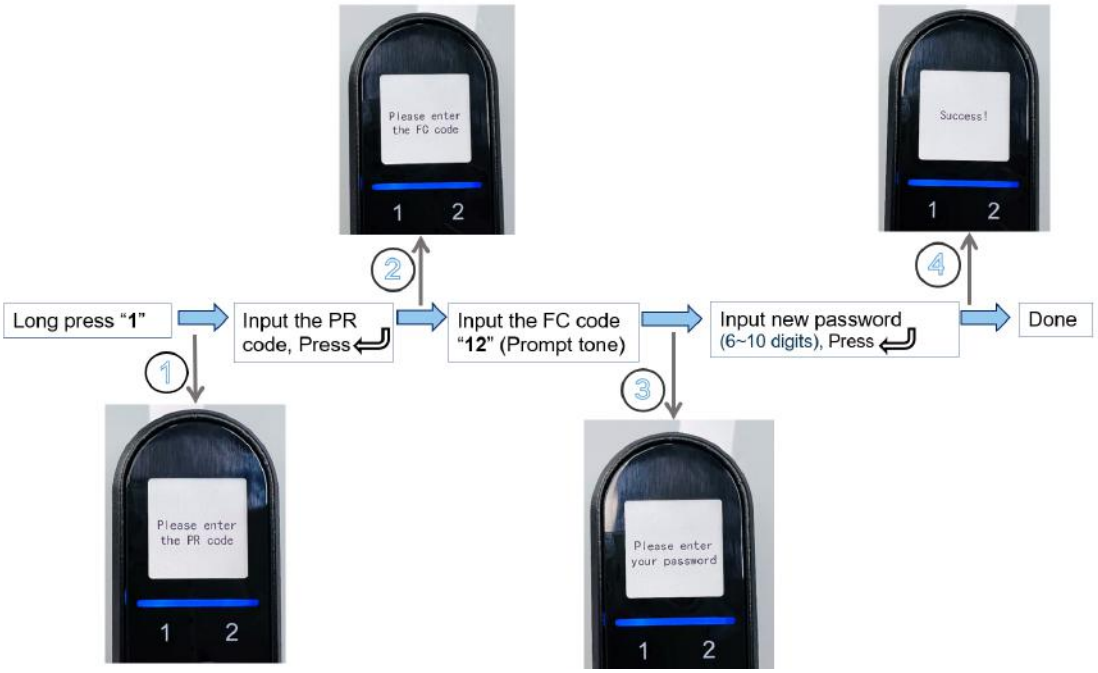

Figure 4-6 Add password

d. Delete password

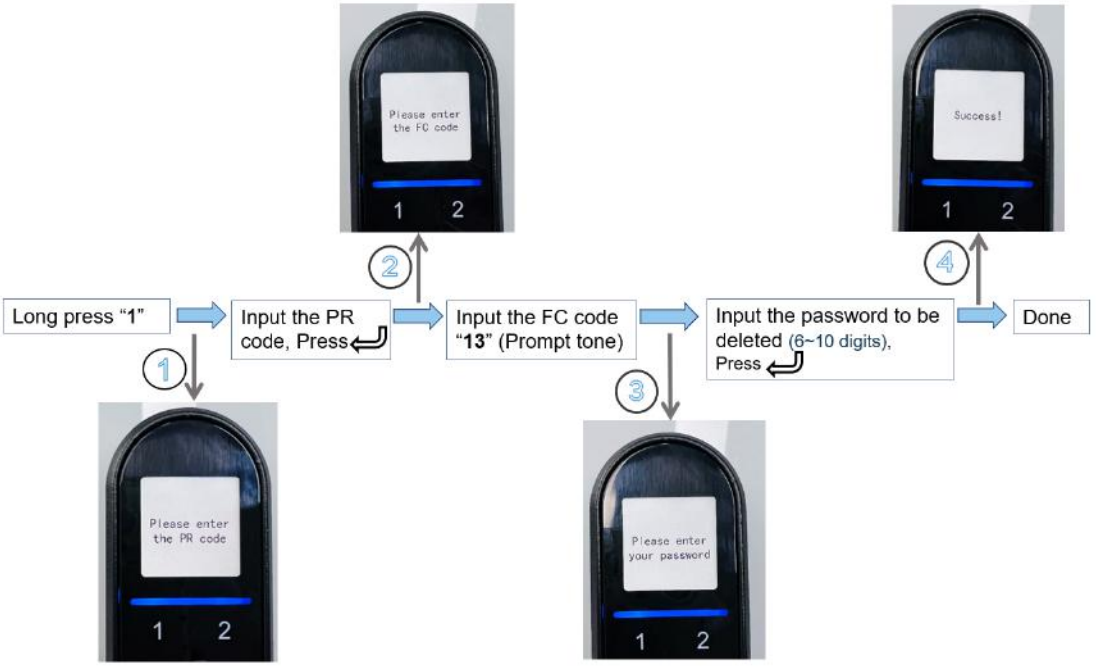

Figure 4-7 Delete password

e. Add Card

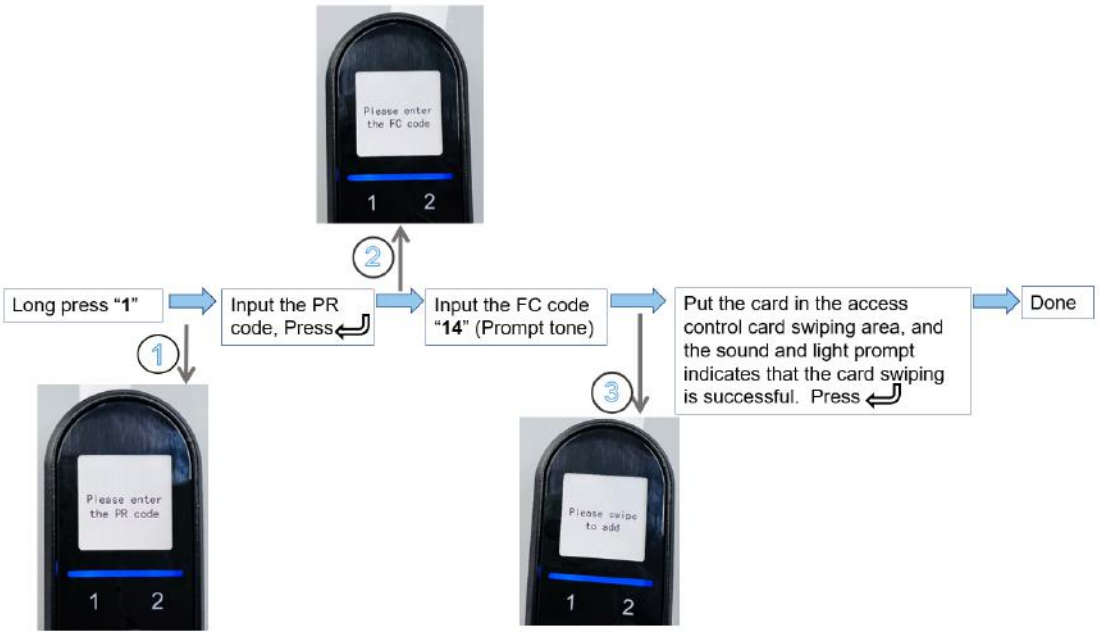

Figure 4-8 Add card

f. Delete Card

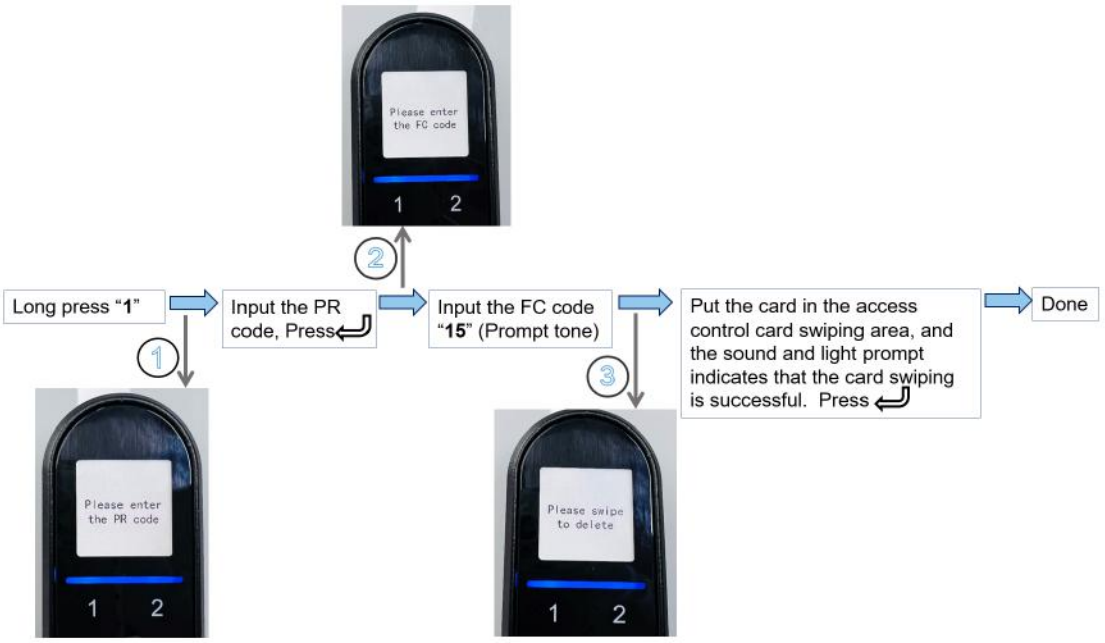

Figure 4-9 Delete card

g. Add Fingerprint

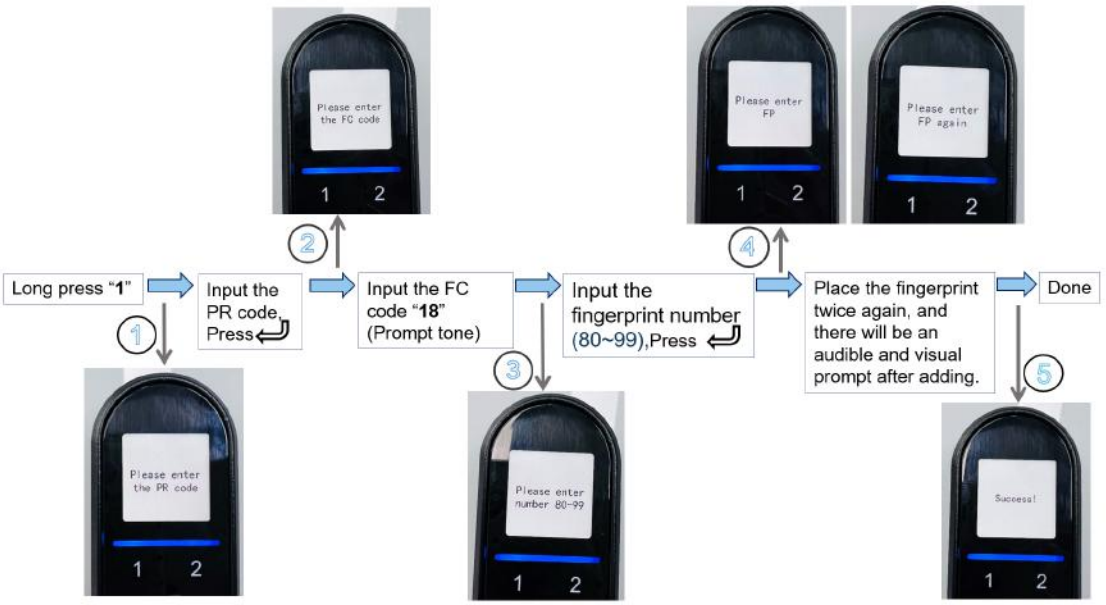

Figure 4-10 Add fingerprint

h. Delete fingerprint

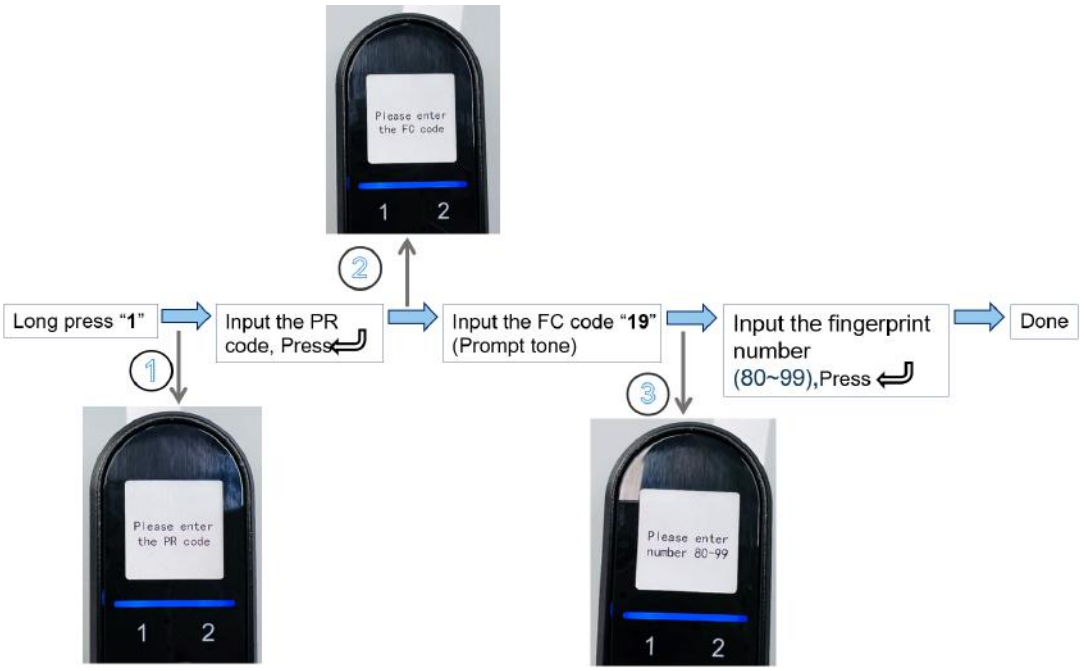

Figure 4-11 Delete fingerprint

i. Delete all users

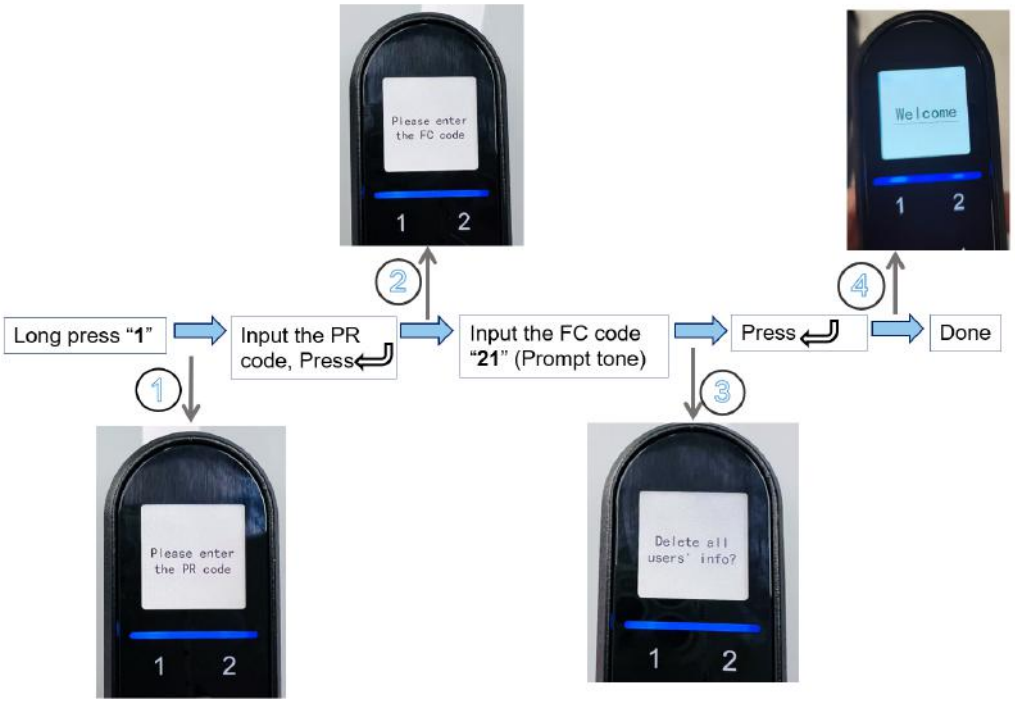

Figure 4-12 Delete all users

j. Restore factory settings

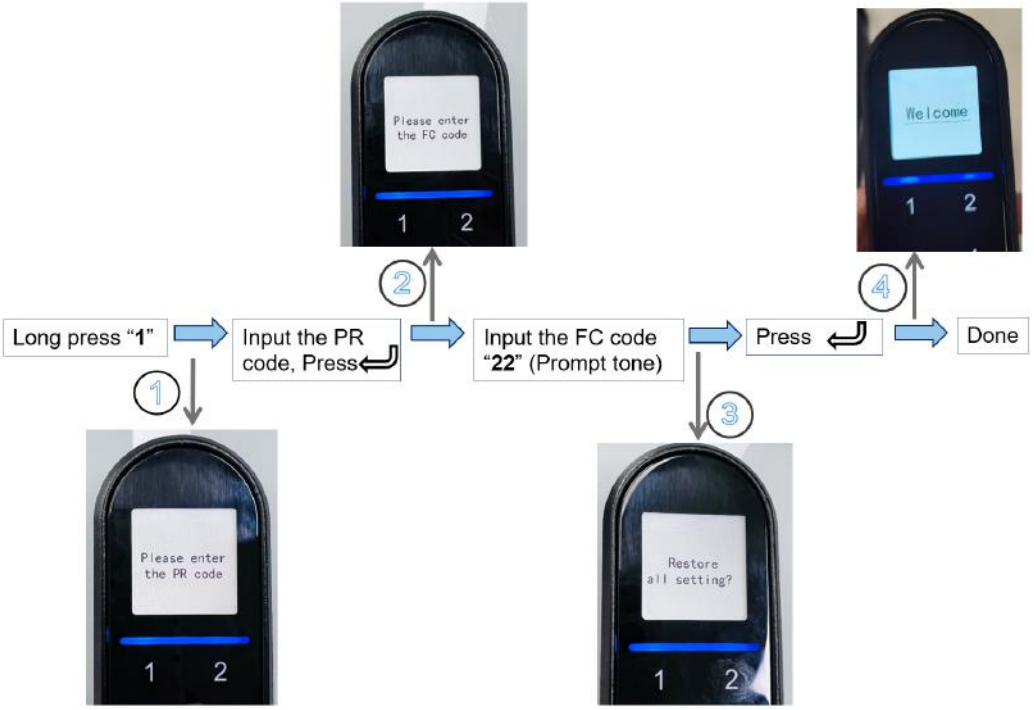

Figure 4-13 Restore factory settings

k. Set the date

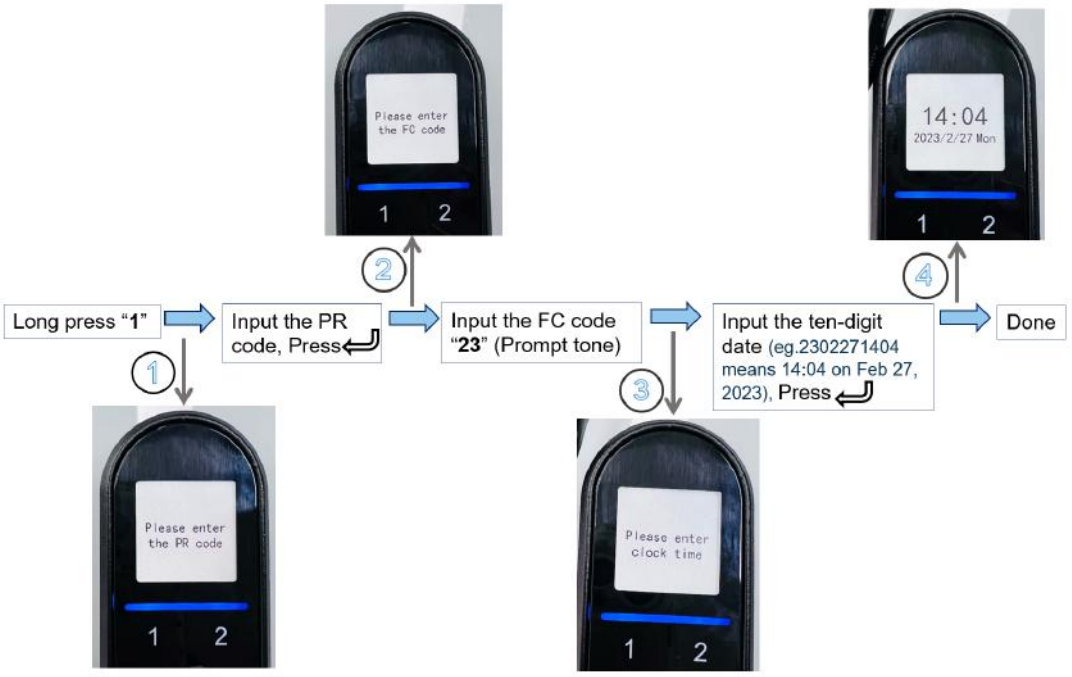

Figure 4-14 Set the date

NOTE:

- If the operation process is wrong, press the C key to return to the homepage for resetting again.

4.6. Shutdown

- Click the HMI home page shutdown button.

Figure 4-15 Turn off

5. Management System

5.1. Management system interface

After the unit is powered on, the monitoring host (HMI) automatically enters the monitoring system.

5.1.1. Home page

Figure 5-1 Home page

This page shows the important parameters, operation modes, dates, function selection menus, as well as the status of the cooling unit.

Click "Real Time Data", "Alarm" and "User Setting" at the bottom of the home page to enter the corresponding page.

Click the "  "in the lower right corner to shut down and start the cooling unit.

Table 5-1 Prompt in the upper right corner of the home page.

Lamps	Description
	Lamp on when cooling stopped
	Lamp on when cooling is operating
	Lamp on when the condensing fan is running
	Lamp on when condensate water processing device works
	Lamp on when there is alarm

Press and hold the "2023-05-10" for 3 seconds at the upper left corner of the home page to set time.

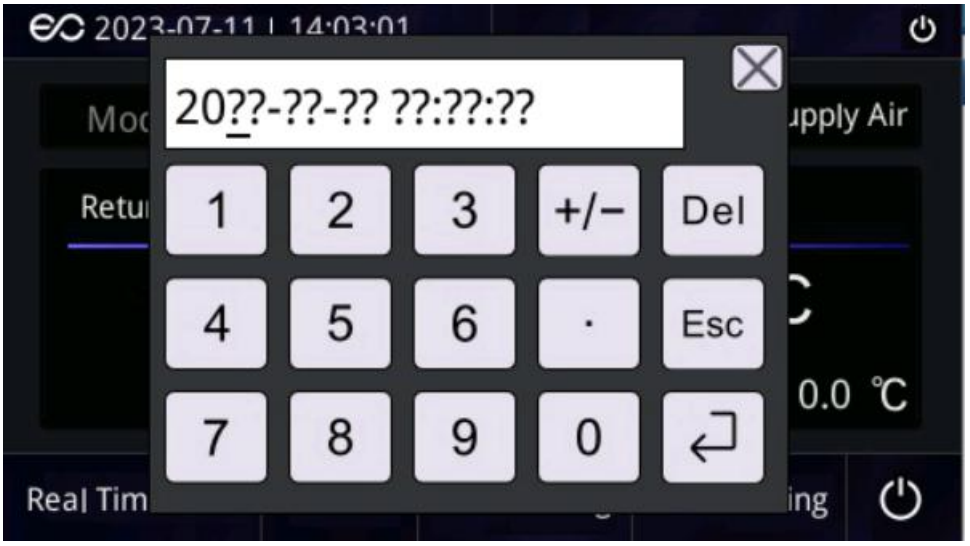

Figure 5-2 Home page-setting time

5.1.2. Real Time Data Page

- **Real Time Data Page -1**

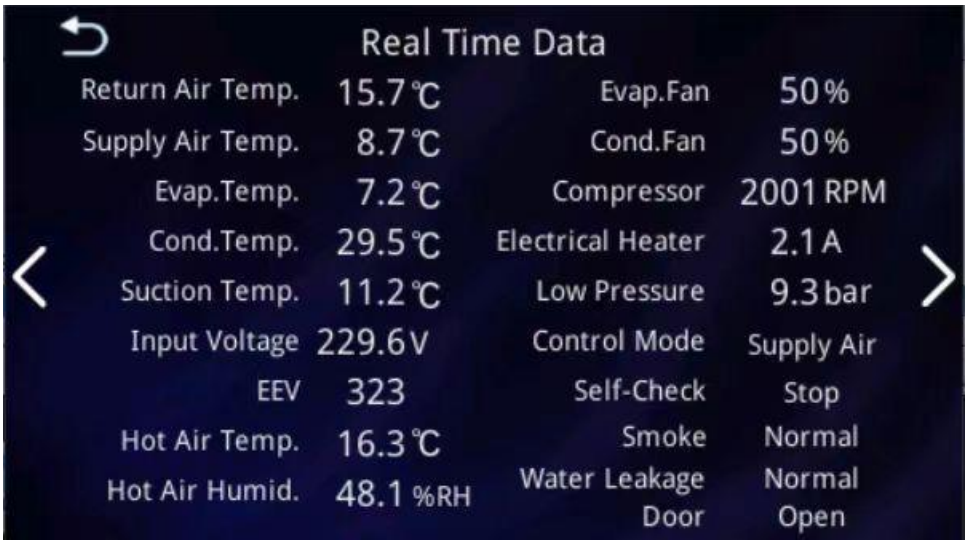

Figure 5-3 Real Time Data Page-1

This page displays the key parameters of EdgeRack 5M.

- **Cooling system parameter**:
- **Return Air Temp**, detected by the sensor located in the return air side inside the cooling unit, which is also the air temperature in the area drawn out from the IT equipment to the air inlet of the cooling unit.
- **Supply Air Temp**, detected by the sensor located in the supply air side inside the cooling unit, which is also the air temperature in the area blown out from the air outlet of the cooling unit and to the IT equipment.

- **Evap. Temp**, the evaporating temperature detected by the sensor located on the evaporator outlet pipe inside the cooling unit.
- **Cond. Temp**, the condensing temperature detected by the sensor located on the condenser outlet pipe inside the cooling unit.
- **Suction Temp**, detected by the sensor located on the compressor suction pipe inside the cooling unit.
- **Input Voltage**, the input voltage of the cooling unit.
- **EEV**, the opening step of the electronic expansion valve when the cooling unit is operating.
- **Evap. Fan**, the evaporating fan output.
- **Cond. Fan**, the condensing fan output.
- **Compressor**, the compressor output.
- **Electrical Heater**, the electrical heater operating current of the condensate water processing device in the cooling unit. When there is the current means that the condensate water processing device is working.
- **Low Pressure,** the pressure of the compressor detected by the pressure sensor located on the compressor suction pipe inside the cooling unit.

○ **Air Temperature & Humidity inside the cabinet,**

Hot Air Temp. and **Hot Air Humid** is detected by a sensor located in the rear of the cabinet. And when the Hot Air Temp is higher than the Hot air high-temperature setting value, the front door will automatically open.

○ **Unit Operating status**

- **Control Mode**, the control mode of the cooling unit. Display supply air or return air according to the operation control mode selected by the user.
- **Self-Check**, the self-check status of the cooling unit. When the cooling unit is powered on, it will automatically enter the self-Check mode and the self-check status is shown as “Running”. When the self-check mode ends, the status is shown as “Stop”.
- **Smoke**, detected by the sensor located in the rear of the cabinet. When smoke is detected, the status is shown as “Alarm”. When no smoke is detected, the status is shown as “Normal”.
- **Water Leakage**, detected by the sensor located at the bottom of the cabinet. When water leakage is detected, the status is shown as “Alarm”. When no water leakage is detected, the status is shown as “Normal”.
- **Door,** the front door status of the cabinet. When the front door of the cabinet is open, the status is shown as” Open”. When the front door of the cabinet is closed, the status is shown as” Close”.

● **Real Time Data Page-2**

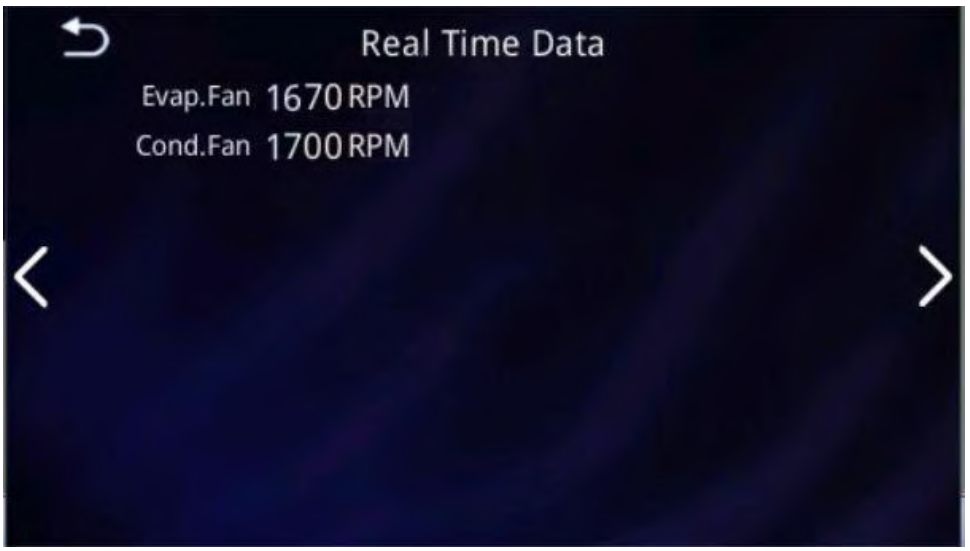

Figure 5-4 Real Time Data-2

This page displays the evaporating fan speed and condensing fan speed.

- **Real Time Data Page-3**

Figure 5-5 Real Time Data Page-3

Display the return air temperature curve and supply air temperature curve of the cooling unit, which can record the temperature curve of the last 1.5 hours.

5.1.3. Alarm page

- **Current Alarm**

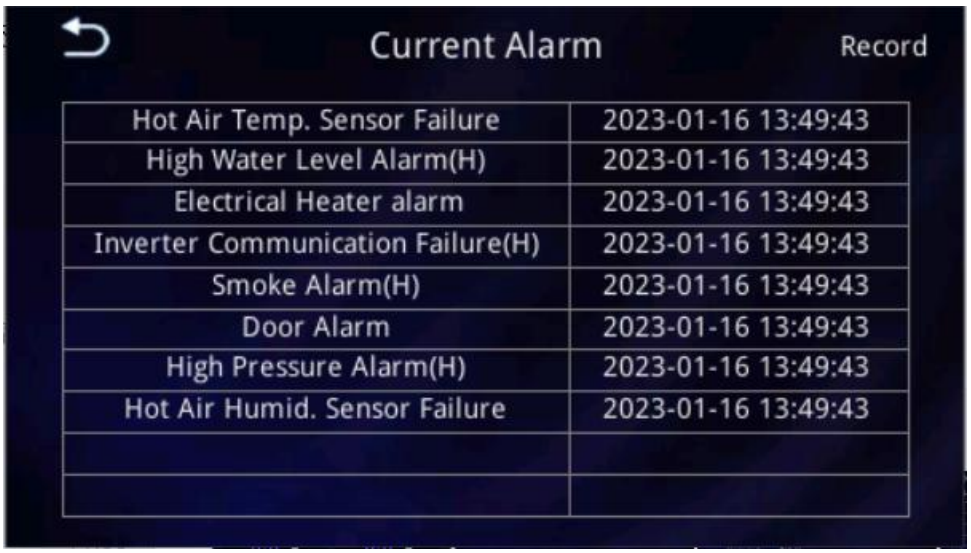

Figure 5-6 Current Alarm Page

Display the current alarm, and click “Record" to access the historical alarm page. The user can slide down the right slider to view other current alarms.

- **Alarm Record**

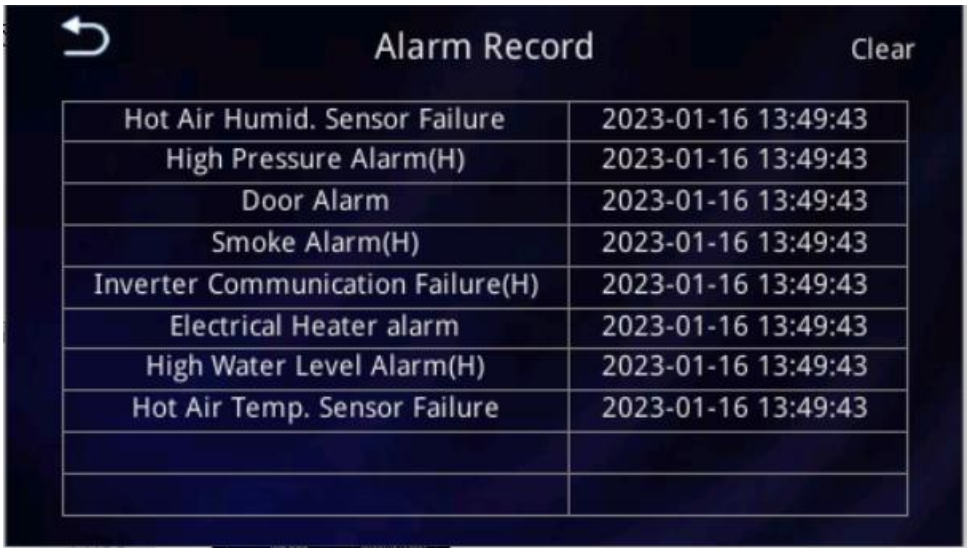

Figure 5-7 Alarm Record Page

The historical alarm page can store up to 1000 alarms. Click "Clear Record" to clear the historical alarms, and the user can slide down the right slider to view other historical alarms.

5.1.4. User Setting Page

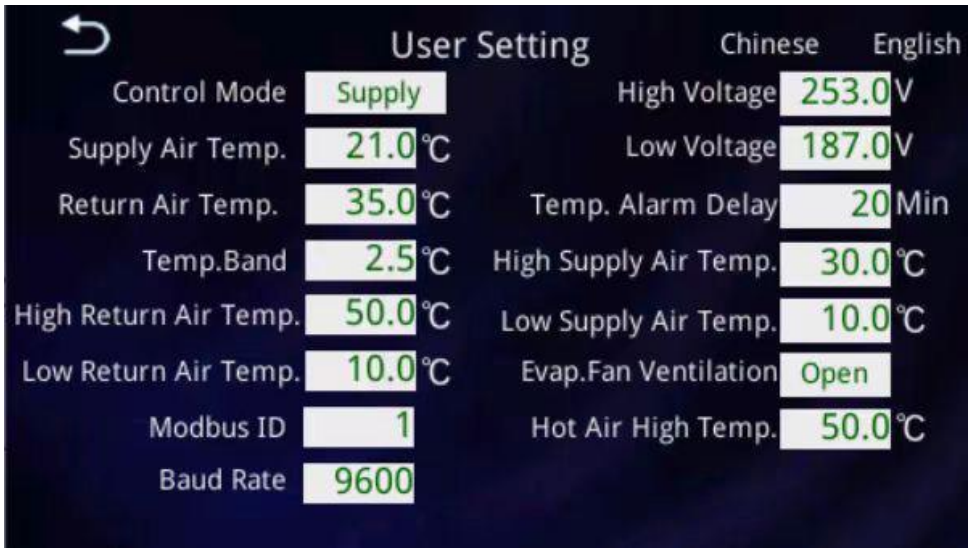

Figure 5-8 User Setting Page

This page shows the current set point; clicking on the blank of the data box, the setting parameters can be changed, it will pop up the keyboard for inputting data, then click on the " ↵ " to confirm the change.

- "**Control Mode**", choosing the control temperature which controls the operation of the cooling unit. You can choose to supply air or return air.
- "**Supply Air Temp.**", the temperature to supply air control to the inverter compressor and fans for operation.
- "**Return Air Temp.**", the temperature to return air control to the inverter compressor and fans for operation.
- "**Temp. Band**", the parameter that cooperates with the temperature to control the inverter compressor and fans for operation.
- "**High Return Air Temp.**", the high return air temperature alarm setting value, when the return air temperature of the cooling unit is higher than the setting value to trigger the alarm.
- "**Low Return Air Temp.**", the low return air temperature alarm setting value, when the return air temperature of the cooling unit is lower than the setting value to trigger the alarm.
- "**Modbus ID**", the communication address setting.
- "**Baud Rate**", the communication baud rate setting.
- "**High Supply Air temp.**", the high supply air temperature alarm setting value, when the supply air temperature of the cooling unit is higher than the setting value to trigger the alarm.
- "**Low Supply Air temp.**", the low supply air temperature setting value, when the supply air temperature of the cooling unit is lower than the setting value to trigger the alarm.
- "**Temp. Alarm Delay**", the temperature alarm delay setting of the startup.
- "**High Voltage**", the high voltage alarm setting value, when the input voltage of the cooling unit is higher than the setting value to trigger the alarm.

- "**Low Voltage**", the low voltage alarm setting value, when the input voltage of the cooling unit is lower than the setting value to trigger the alarm.
- "**Evap. Fan Ventilation**", the evaporating fan running mode in the standby status. If "Close" is selected, the evaporating fan will not run in standby status. If "Open" is selected, the evaporating fan will run at the lowest speed in standby status.
- "**Hot Air High temp.**", the hot air high-temperature setting value, when the hot air temperature is higher than the setting value triggers the alarm, and the front door automatically opens.

5.2. Remote Monitoring

The EdgeRack 5M supports remote monitoring and is configured with a standard RS485 communication port.

- **Tools**

A USB to RS485 converter and computer are required (not included).

Figure 5-9 USB to RS485 Converter

- **Connection port**

The wiring terminal (**Green 3P**) is at the rear of the cabinet as Figure 5-10.

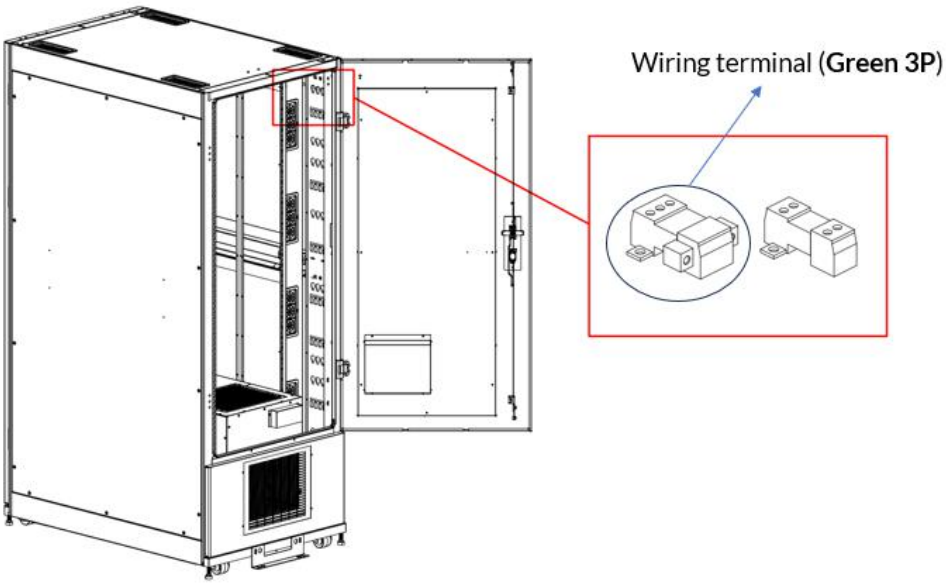

Figure 5-10 RS485 terminals position diagram

a. Unplug the upper part of the RS485 terminal.
b. Connect the RS485 terminal to the USB to the RS485 converter using a 2-core wire.
c. Insert the upper part of the RS485 terminal back into the original interface.
d. Plug the USB to RS485 converter into the USB port on the computer.

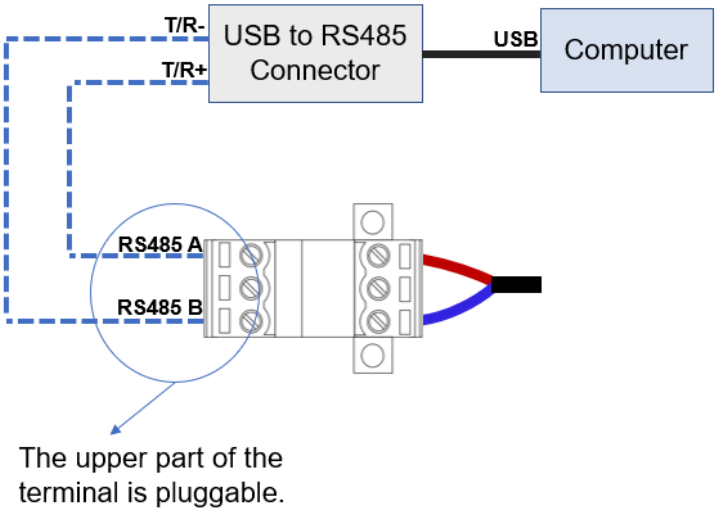

Figure 5-11 Connection schematic diagram

Table 5-2 RS485 Wiring

No.	Wire Color	Description
1	Red	RS485-A
2	/	/
3	Blue	RS485-B

- **Software communication connection and reading data**

a. Open the computer and search in the bottom left corner of the computer "Device Manager", Open "Device Manager", Enter the interface, and Select "USB Connector Managers" to view the connected ports（eg: COM1 /COM2/COM3/COM4/COM5/COM6）

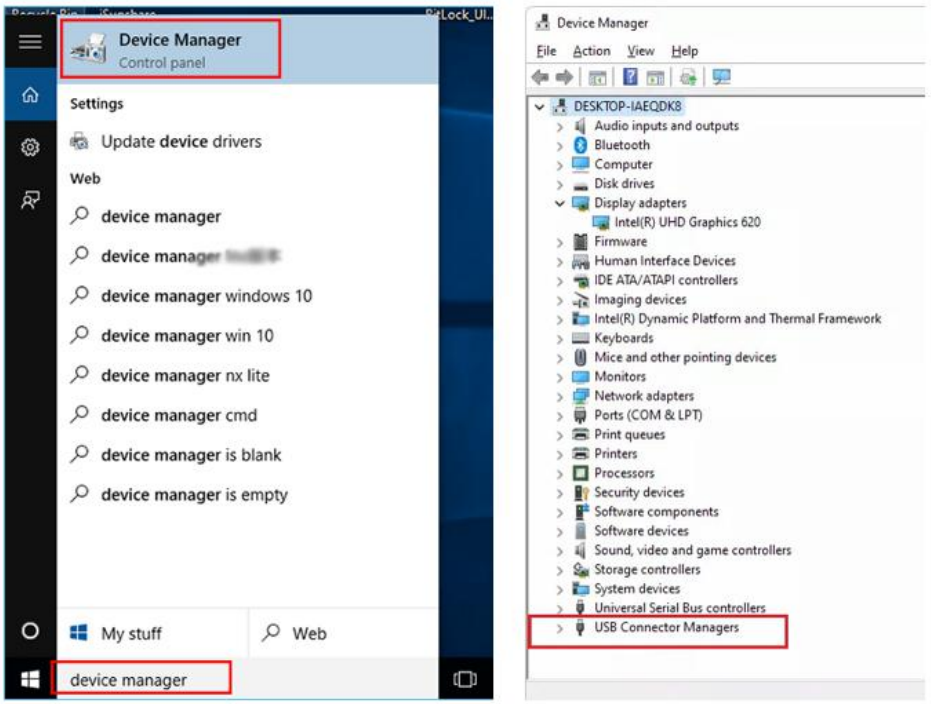

Figure 5-12 Find the USB port on the computer

b. Open the remote access software (Service AirCond-V104En), Enter the Configuration page, In Port No, select the port corresponding to the computer (eg: COM1 /COM2/COM3/COM4/COM5/COM6), Click the “Open”, Click the “Read”, Finally click "Read All". If the communication indicator color changes to green in the upper right corner of the configuration page, the connection is successful.

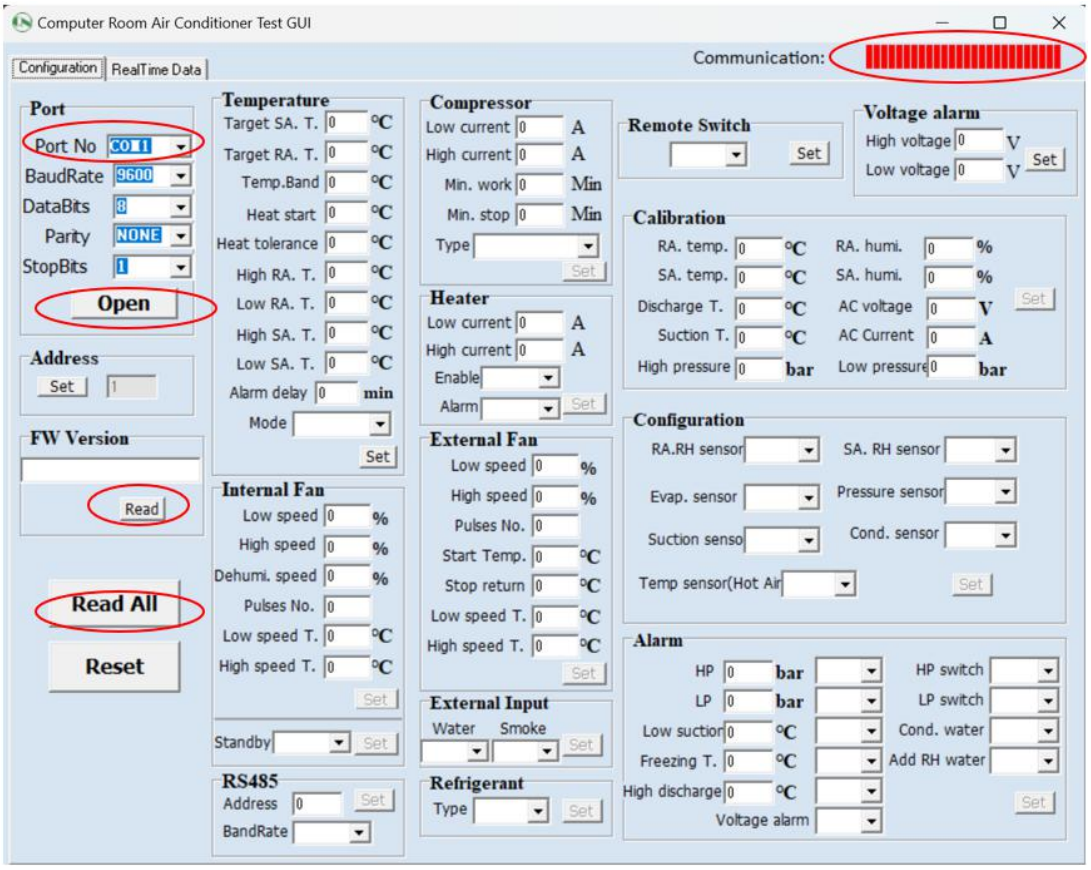

Figure 5-13 Configuration page

Users can set cooling unit parameters on the configuration page.

Target SA.T.: Supply air temperature setting

Target RA.T.: Return air temperature setting

Temp.Band: Control temperature band setting

Heat start: Disable

Heat tolerance: Disable

High RA. T.: High return air temperature alarm setting

Low RA. T.: Low return air temperature alarm setting

High SA. T.: High supply air temperature alarm setting

Low SA. T.: Low supply air temperature alarm setting

Alarm delay: Temperature alarm delay setting of the startup

Mode: Control mode setting

Remote Switch: Disable

Voltage alarm: High voltage and low voltage alarm settings.

c. Click the "RealTime Data" at the top of the monitoring interface to review the real-time data.

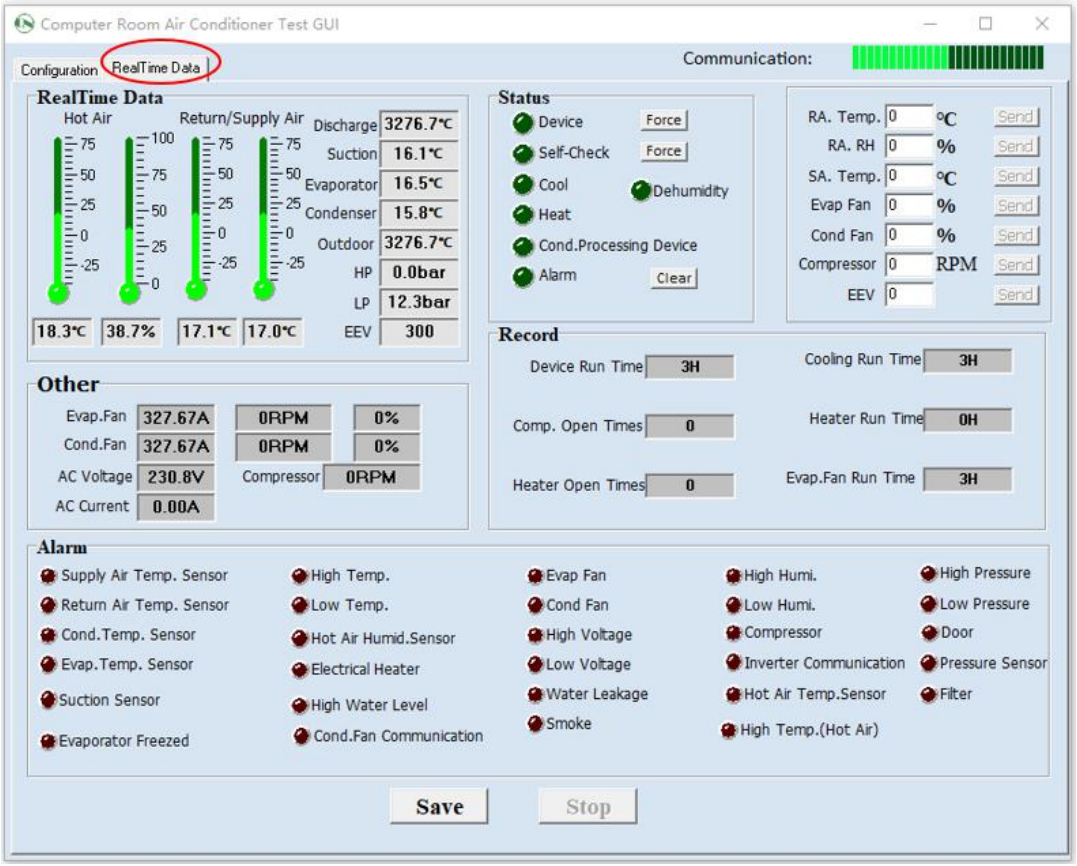

Figure 5-14 RealTime Data page

This page displays the temperatures, important components running status, the cooling unit input voltage, alarm, and low pressure of the cooling unit.

6. Maintenance

6.1. Safety Guidelines

- All maintenance work must be performed by authorized qualified professionals in strict accordance with relevant codes; otherwise, it may result in personal injury, environmental damage, and safety hazard.
- Professional maintenance shall be implemented with caution. Please contact the Customer Service Center of ENCONNEX for specific details.

6.2. Condensate Water Processing Device

When the "High Water Level Alarm" is generated on the HMI display, users need to maintain the condensate device.

1) Open the front door, and remove the condensing side sealing flange.

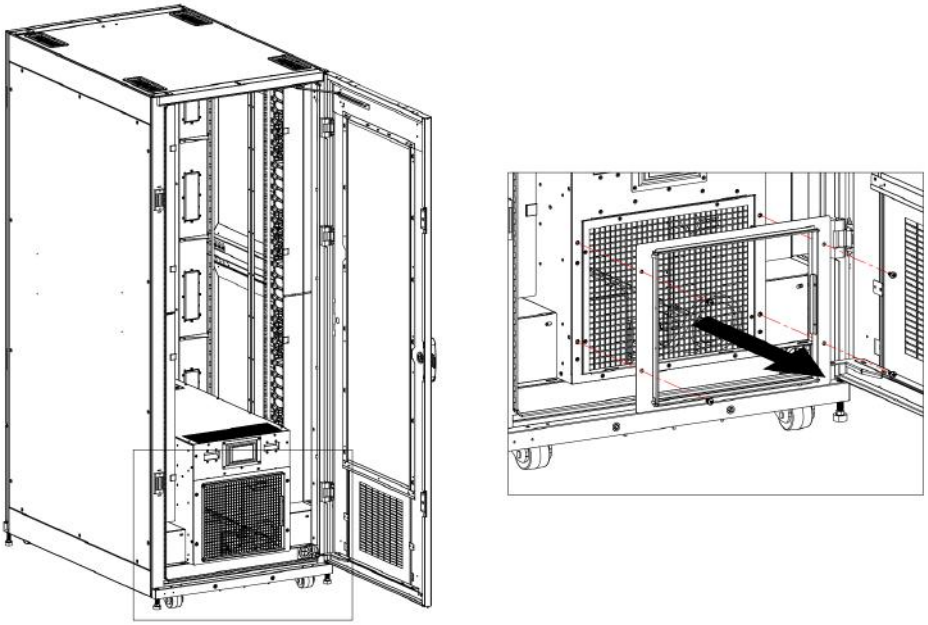

Figure 6-1 Remove the sealing flange and filter

2) Remove the front grille of the cooling unit.

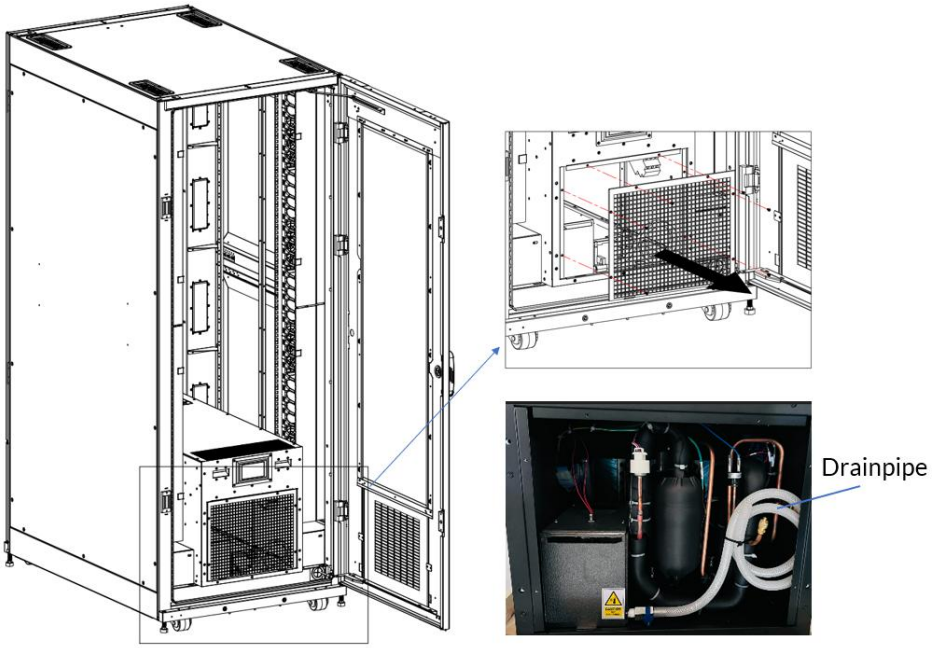

Figure 6-2 Remove the front grille

3) Route the drainpipe through the reserved hole at the bottom of the cooling unit and cabinet.

Figure 6-3 Install the drainpipe

4) Turn the drain valve 90°, and open it to drain water.

Figure 6-4 Open the drain valve

Note: The temperature of the condensate discharged is high, so be careful of scalding when operating.

6.3. Filter

The filter is installed at the air inlet flange on the condensing side of the cabinet. If the filter is dirty, it can be cleaned directly from the cabinet, cleaned and dried before being installed in the cabinet.

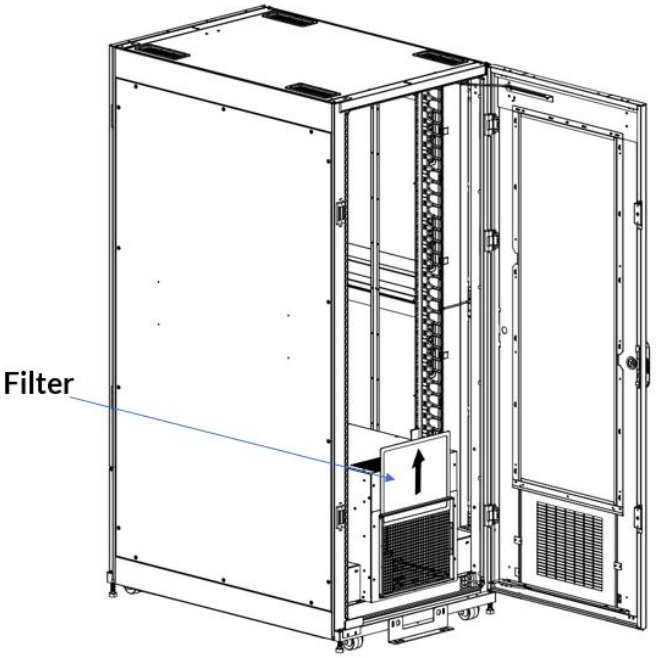

Figure 6-5 Remove the filter

6.4. Electrical

The electrical box of EdgeRack 5M is located at the rear of the cabinet. The electrical box cover plate needs to be removed for maintenance.

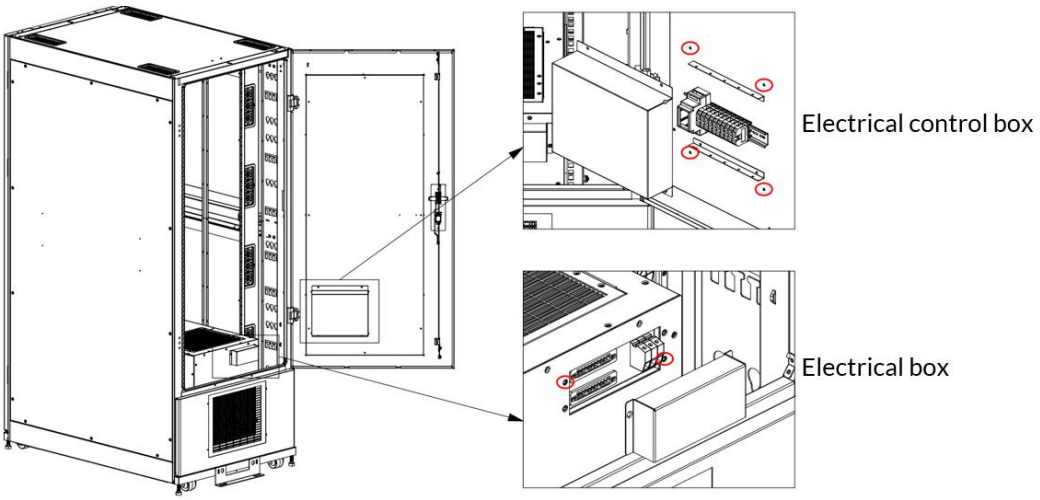

Figure 6-6 Electrical box position diagram

The electrical box should be visually inspected every six months by a qualified technician to check for electrical connections and circuit corrosion.

Maintenance checks one by one by the following:

1) Confirm the aging of the power connection, and replace the cable if necessary.
2) Component screws are tightened.
3) The electrical components with a brush to remove dust.

- **Electrical control box**

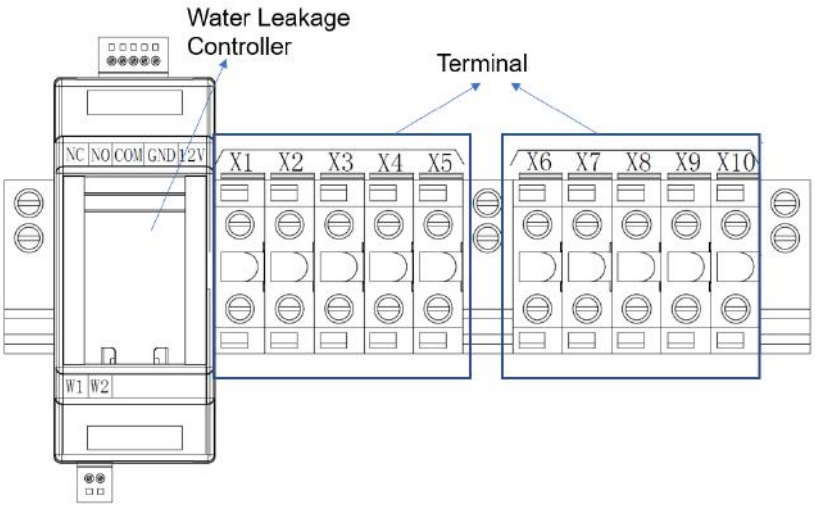

Figure 6-7 Electrical control box layout diagram

Table 6-1 Electrical box description

Items	Symbol	Description
Water leakage controller	12V	Power positive 12V
	GND	Power negative GND
	COM	Dry contact common output

	NO	Dry contact normally open output
	NC	Dry contact normally closed output
	W1	Water leakage sensor port W1
	W2	Water leakage sensor port W2
Terminal	X1, X2, X3, X4, X5	Power supply output DC12V
	X6, X7, X8, X9, X10	Power supply output GND

- **Electrical box**

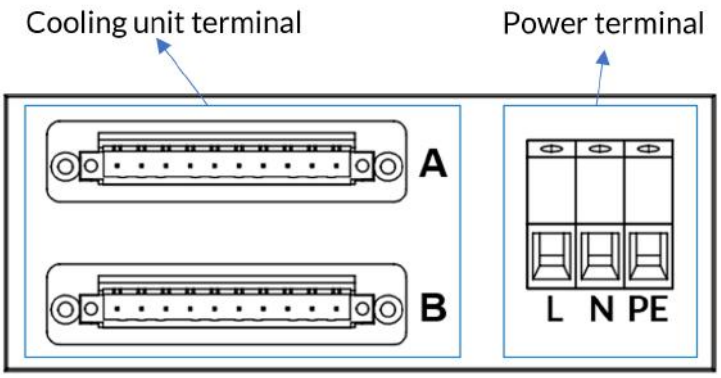

Figure 6-8 Electrical box layout diagram

- **Cooling unit terminals**

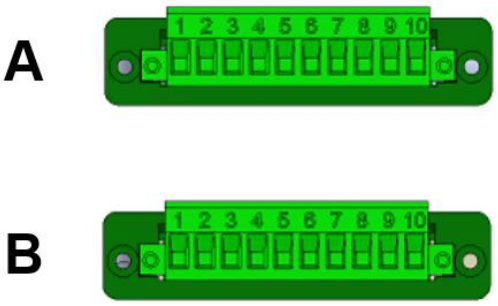

Figure 6-9 Cooling unit terminals

Table 6-2 Content and description tags

Number	Symbol	Description
A~1	RS485A	Positive pole of RS 485 communication
A~2	RS485B	Negative pole of RS 485 communication
A~3	NO	Dry contact normally open output

A~4	COM	Dry contact common output
A~5	NC	Dry contact normally closed output
A~6	1-6	Power positive of Temperature and humidity sensor VCC
A~7	1-7	Humidity single out of Temperature and humidity sensor RH
A~8	1-8	Power negative of Temperature and humidity sensor GND
A~9	1-9	Temperature single out of Temperature and humidity sensor T (Temperature and humidity sensor)
A~10	/	/
B~1	DC12V +	Positive Output DC12V
B~2	DC0V -	Negative Output DC0V
B~3	Water leakage sensor	Water leakage sensor
B~4		
B~5	Access control sensor	Access control sensor
B~6		
B~7	Smoke sensor	Smoke sensor
B~8		
B~9	Access control	Access control
B~10		

Note:

- All control boards need to be taken out for maintenance, make sure the cooling unit is powered down before taking it out.
- Refer to the electrical system wiring diagram when troubleshooting the EdgeRack 5M circuit faults.

6.5. Replacing the cooling unit

- Open the rear door and remove the rear lower panel.

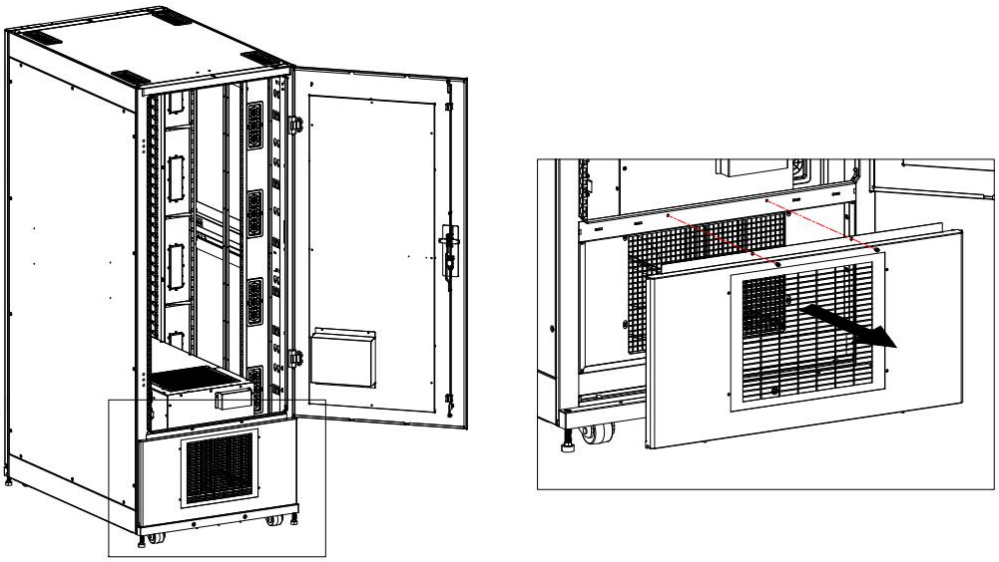

Figure 6-10 Remove the rear lower panel

- Remove 4 screws at the air outlet.

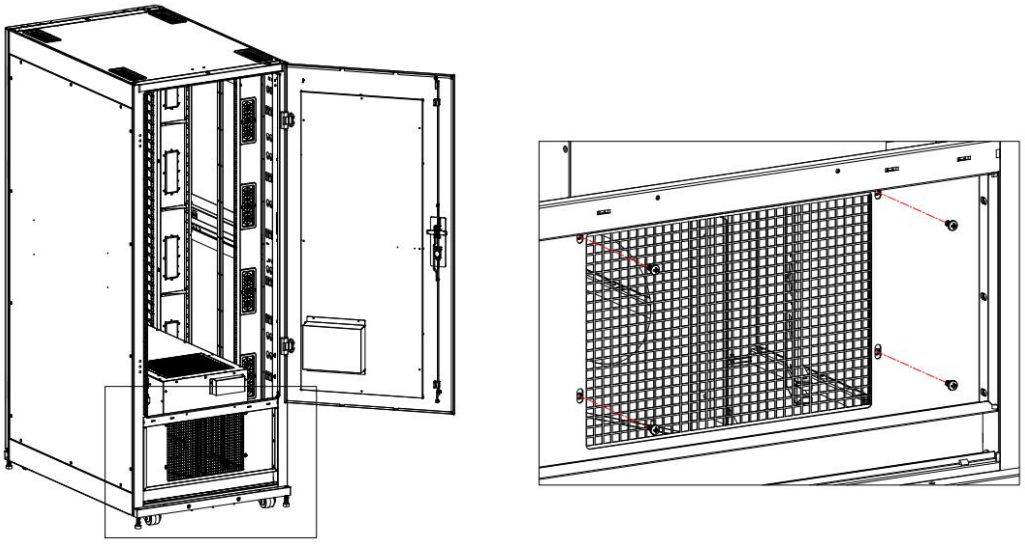

Figure 6-11 Remove 4 screws at the air outlet

- Open the front door, remove 6 fixing screws and take out the cooling unit. (800 wide cabinet)

  Note: There are 8 fixing screws on the 600 wide cabinet.

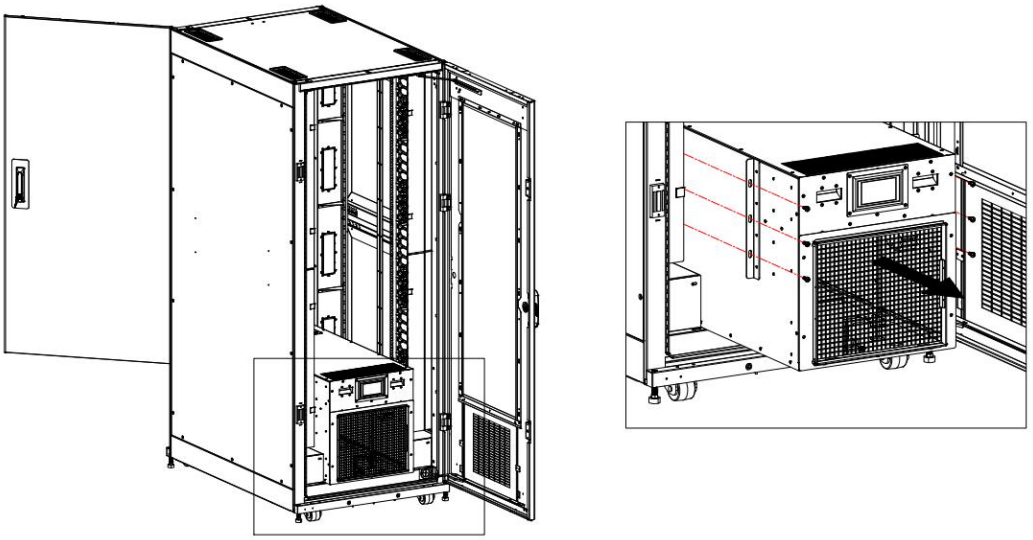

Figure 6-12 Remove the cooling unit

- Install the cooling unit by reversing the steps.

NOTE:

- Cooling unit replacement operation requires professional personnel.
- Due to the heavy cooling unit, two people need to work together to replace it.

6.6. Alarm reference

The unit alarms are divided into high-level alarms and low-level alarms.

- High-level alarm (H): an audible and visible alarm is generated.
- Low-level alarm: no visible or audible alarm.

For all of the alarms shown on the HMI display, you can find the related information below.

Table 6-3 Alarm Instructions

Alarm Items	Trigger Condition	Reset
Compressor Alarm (H)	Compressor speed not detected.	The compressor alarm will be cleared 5 minutes later. The compressor alarm appeared three times and needed to be powered on again manually.
Evap. Fan Alarm(H)	The deviation between the feedback speed and the theoretical value exceeds 20%.	When the deviation between the feedback speed and the theoretical value is less than 20%, the alarm will be cleared automatically.
Cond. Fan Alarm(H)	The deviation between the feedback speed and the	When the deviation between the feedback speed and the theoretical value is less than

	theoretical value exceeds 20%.	20%, the alarm will be cleared automatically.
Low Pressure Alarm(H)	When the pressure value of the pressure sensor is less than 0.5Mpa.	When the pressure exceeds 0.55Mpa, the alarm will be cleared automatically.
Pressure Sensor Failure	When the pressure value exceeds the sensor range.	When the pressure is within the range of the sensor, the alarm will be cleared automatically.
High Pressure Alarm(H)	The high-pressure sensor detects that the pressure is higher than the setting pressure limit.	Stop cooling for 5 minutes. During this time, the evaporator fan runs at a low speed. After 5 minutes, the system will automatically recover. If the high-pressure alarm appears three times in a row, the system will need to be powered on again.
Inverter Communication Failure(H)	The inverter PCB doesn't communicate.	After the communication is normal, the alarm is cleared automatically.
Return Air Temp. Sensor Failure	The return air temperature sensor failed to detect the temperature.	The alarm will be automatically cleared after the sensor is properly connected.
Supply Air Temp. Sensor Failure	The supply air temperature sensor failed to detect the temperature.	The alarm is automatically cleared after the sensor is properly connected.
Evap. Temp. Sensor Failure	The evaporating temperature sensor failed to detect the temperature which is located on the outlet pipe of the evaporator.	The alarm will be automatically cleared after the sensor is properly connected.
Cond. Temp. Sensor Failure	The condensing temperature sensor failed to detect the temperature which is located on the outlet pipe of the condenser.	The alarm will be automatically cleared after the sensor is properly connected.
Suction Temp. Sensor Failure	The suction temperature sensor failed to detect the temperature which is located on the suction pipe of the compressor.	The alarm will be automatically cleared after the sensor is properly connected.

Low Temp. Alarm	An alarm will be triggered when the temperature and humidity sensor detect that the temperature is lower than the setting temperature.	This alarm will be automatically cleared when the temperature is higher than the set value of 35.6℉ (2℃).
High Voltage Alarm	The input voltage is higher than the high voltage set value.	The detected voltage is 5V lower than the set value and lasts for 3 minutes, the alarm will be automatically cleared.
Low Voltage Alarm	The input voltage is lower than the high voltage set value.	If the detected voltage is 5V higher than the set value and lasts for 3 minutes, the alarm will be automatically cleared.
High Water Level Alarm(H)	The condensate tank water level reaches the upper limit.	The float switch is closed and lasts for 3 minutes, the alarm will be automatically cleared.
Hot Air Temp. Sensor Failure	The hot air temperature sensor failed to detect the temperature which is located on the hot aisle.	The alarm is automatically cleared after the sensor is properly connected.
Hot Air Humid. Sensor Failure	The hot air humidity sensor failed to detect the humidity which is located on the hot aisle.	The alarm will be automatically cleared after the sensor is properly connected.
High Temp. Alarm (H)	The return air temperature sensor detects that the temperature exceeds the set temperature.	The alarm will be cleared automatically when the temperature is lower than 35.6℉ (2℃).
Door Alarm	The cabinet front door or rear door is open.	The alarm will be automatically cleared once both the front and rear doors are closed.
Water Leakage Alarm(H)	An alarm is triggered when the water leakage detection rope detects the water.	When there is no water detected, the alarm will automatically clear.
Smoke Alarm (H)	The smoke sensor detects that the smoke concentration exceeds the set value and triggers an alarm.	When there is no smoke detected, the alarm will automatically clear.
High Temp. Alarm (Hot Air) (H)	When the temperature and humidity sensor detect that the	When the temperature inside the cabinet is lower than 35.6℉

	temperature exceeds the set temperature, an alarm will be triggered.	(2℃), the alarm will be cleared automatically.
Low Humid. Alarm	When the hot air humidity sensor detects a humidity value lower than the set humidity, an alarm will be triggered.	When the humidity is higher than 5%RH, the alarm will be cleared automatically.
High Humid. Alarm	When the hot air humidity sensor detects a humidity value higher than the set humidity.	When the humidity is lower than 5%RH, the alarm will be cleared automatically.
Evaporator Freezed Alarm	This alarm will be triggered when the detected evaporation temperature is less than or equal to 30.2℉(-1℃).	Stop cooling for 5 minutes. During this time, the evaporator fan runs at a low speed. After 5 minutes, the system will automatically recover to re-detect the alarm. If the Evaporator Freezed Alarm appears three times, the system will need to be powered on again manually.
Filter Alarm	Filter mesh blockage at the air inlet on the condensing side.	Replace the filter.

6.7. Troubleshooting

Below are basic troubleshooting steps. Contact Enconnex technical support for further instruction.

Table 6-4 Troubleshooting

Symptom	Possible Causes	Measures
The sound of the cooling unit is abnormal	The compressor and fan are not installed properly, and the pipes are not fixed well.	Contact Enconnex technical support.
Excessive compressor noise	The liquid refrigerant enters the compressor.	Contact Enconnex technical support.
	Lubricating oil is insufficient	Contact Enconnex technical support.
Compressor Alarm (H)	The wiring of the circuit breaker, frequency converter, and contactor is broken.	Check the wiring according to the electrical schematic diagram. Contact Enconnex technical

		support.
	Compressor motor damage.	Contact Enconnex technical support.
Evap. Fan Alarm(H)	The control signal is disturbed.	Power off and restart.
	The evaporating fan wire is disconnected.	Check the wiring according to the electrical schematic diagram. Contact Enconnex technical support.
	The evaporating fan was damaged.	Contact Enconnex technical support.
Cond. Fan Alarm(H)	The control signal is disturbed.	Power off and restart.
	The condensing fan wire is disconnected.	Check the wiring according to the electrical schematic diagram. Contact Enconnex technical support.
	The condensing fan was damaged.	Contact Enconnex technical support.
Low-pressure alarm(H)	The condensing fan speed controller fails.	Contact Enconnex technical support.
	Refrigerant leakage	Contact Enconnex technical support.
High-pressure alarm (H)	The refrigerant pipe or component is blocked.	Contact Enconnex technical support.
	The exhaust air outlet of the cabinet is shielded.	Remove the obstructions.
	There is air in the pipes of the refrigeration system.	Contact Enconnex technical support.
	The condenser is dirty or blocked, causing poor heat dissipation.	Contact Enconnex technical support.
	The condensing fan failure.	Check the condensing fan running status. Contact Enconnex technical support.
	Heavy IT load	Reduce the IT load in the cabinet
	The refrigerant is overcharged.	Contact Enconnex technical support.
Inverter Communication Failure(H)	The Inverter communication wire is disconnected.	Check the wiring according to the electrical system wiring diagram. Contact Enconnex technical

		support.
	The Inverter PCB board was damaged.	Contact Enconnex technical support.
Sensor Failure	The sensor wire is disconnected.	Check the wiring according to the electrical system wiring diagram. Contact Enconnex technical support.
	The sensor was damaged.	Contact Enconnex technical support.
High Temp. Alarm	Heavy IT load	Reduce the IT load in the cabinet
	The High temperature alarm setting value is too low.	Modify the alarm values on the user setting page of HMI.
Low Temp. Alarm	The low-temperature alarm setting value is too High.	Modify the alarm values on the user setting page of HMI.
Voltage Alarm	The voltage alarm settings are not reasonable.	Modify the alarm values on the user setting page of HMI, and power on the unit again.
	The input voltage is not within the operating voltage range of the unit.	Check the input voltage. After the voltage recovers, power on the unit again.
High Water Level Alarm(H)	The condensate water processing device was damaged.	Install drain pipe, for details, see Maintenance 6.2. Contact Enconnex technical support.
	The ambient humidity of the unit is too high.	Install drain pipe, for details, see Maintenance 6.2.
Door Alarm	The cabinet front door is open.	Close the front door
	The lock wire is disconnected.	Check the wiring according to the electrical system wiring diagram. Contact Enconnex technical support.
Water leakage Alarm(H)	Water leaks at the bottom of the cabinet.	Check the source of the water leak.
Smoke Alarm(H)	There is smoke in the cabinet.	Open the cabinet door and check for smoke sources.
High Humid. Alarm	The ambient humidity is too high, and the cabinet is not properly sealed.	Check whether the cabinet is sealed properly.
Low Humid. Alarm	The low humidity alarm setting value is too High.	Modify the alarm values on the user setting page of HMI.

Evaporator Freezed Alarm	The evaporation temperature is too low.	Contact Enconnex technical support.
Filter Alarm	The ambient air inlet of the cabinet is shielded.	Remove the obstructions.
	The filter is dirty and blocked.	Maintenance filter, for details, see Maintenance 6.3.

6.8. Electrical system layout

Below is the electrical system wiring diagram.

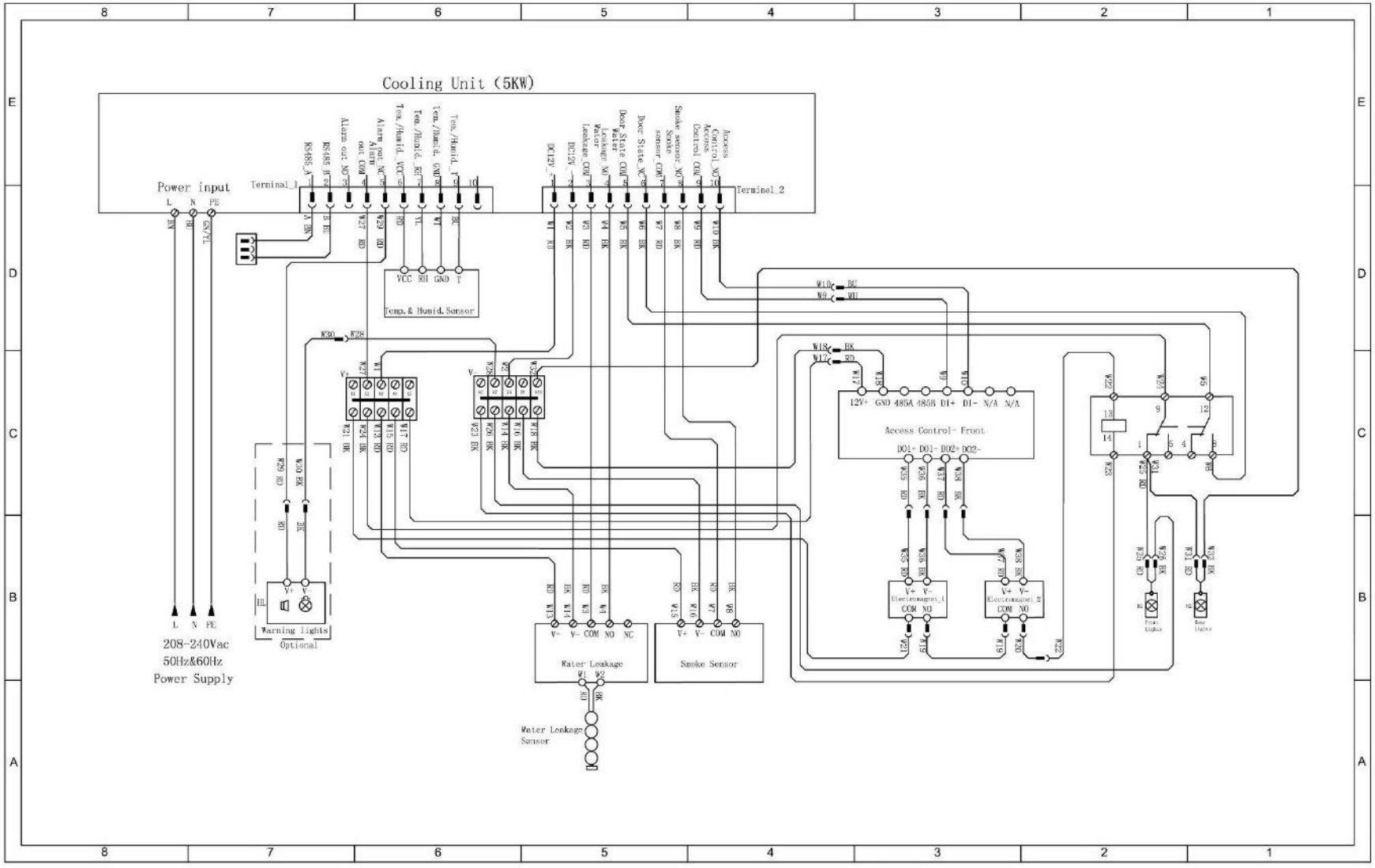
Cooling Unit (5KW)
Power input
L N PE
Terminal_1
Terminal_2
Temp. & Humid. Sensor
VCC RH GND T
Warning lights
Optional
208-240Vac
50Hz&60Hz
Power Supply
Water Leakage
Smoke Sensor
Water Leakage Sensor
Access Control- Front
12V+ GND 485A 485B D1+ D1- N/A N/A
DO1+ DO1- DO2+ DO2-
Electromagnet_1
Electromagnet_2
COM NO
Front Lights
Rear Lights