Notes/Instructions:

| REV | REV DATE | DESCRIPTION | APPROVAL |
|---|---|---|---|
| A | 2019-06-19 | RELEASE | |

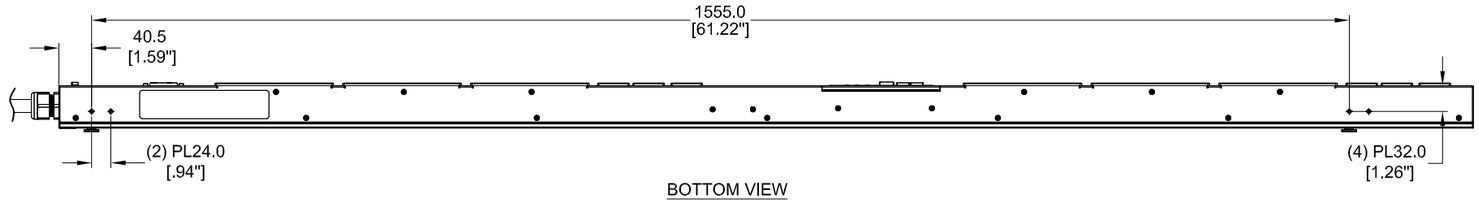


BOTTOM VIEW

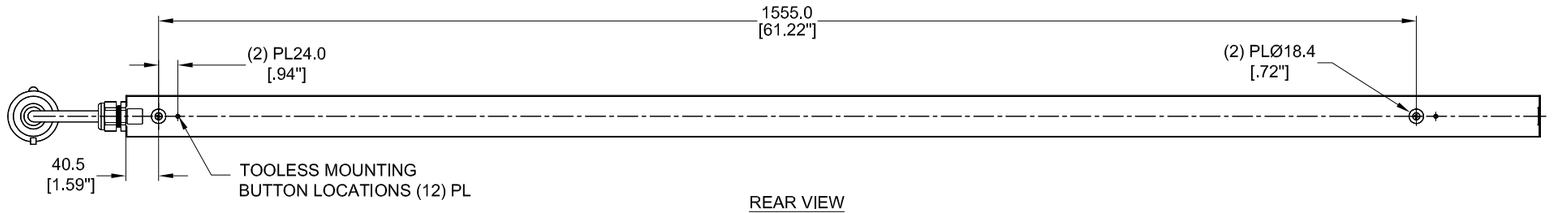


REAR VIEW

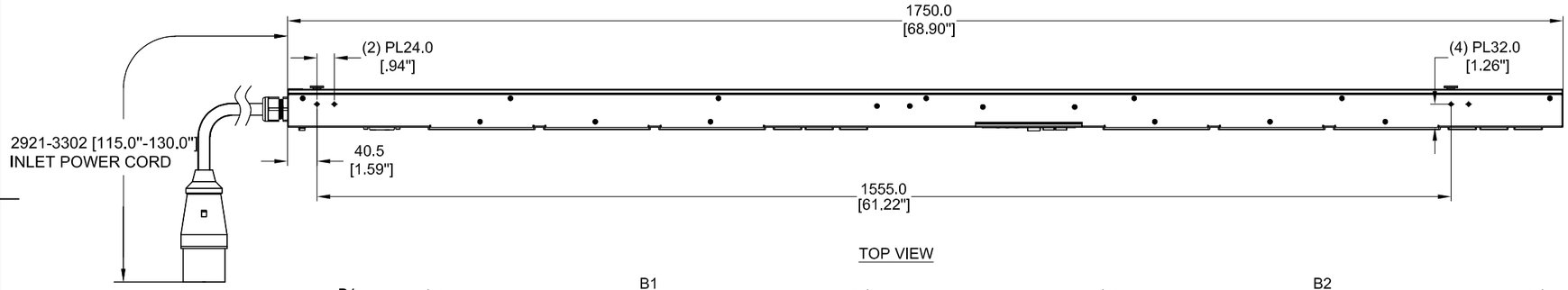


TOP VIEW

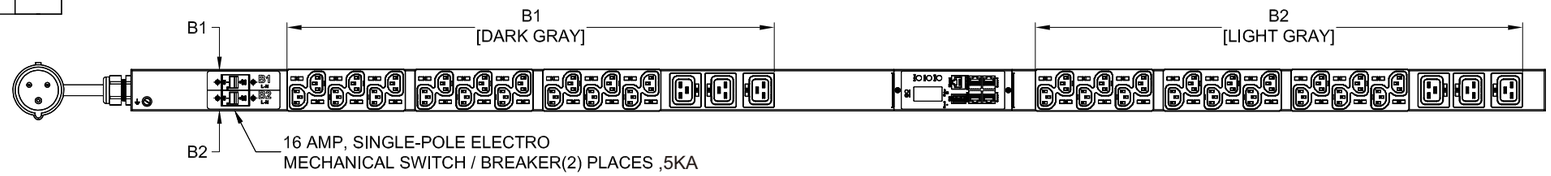


FRONT VIEW

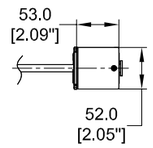


BOTTOM VIEW

SPECIFICATION:

1. STANDARD:

| | |
|---|---|
| UNIT TYPE: | MONITORED INPUT |
| ORIENTATION: | VERTICAL, 0U FULL |
| OUTLET QTY&TYPE: | (36) C13, (6) C19 |
| INPUT VOLTAGE: | 200-240VAC |
| INPUT CURRENT: | 32A |
| BREAKER QTY&TYPE: | (2) 16AMP, SINGLE-POLE |
| INPUT PHASE: | SINGLE-PHASE |
| RATED POWER: | 7.4kVA |
| INPUT PLUG: | IEC 60309 2P+E 6H 32A |
| INPUT POWER CORD: | 3m [10'], TOP FEED |
| REGULATORY STANDARD: | RoHS COMPLIANT |

PLUG/RECEPTACLE BLOCK

PLUG
IEC 60309, 2P 3W, 6H
IP44 (SPLASHPROOF)
32A, 200-250V MAX RATED INPUT

RECEPTACLES
IEC 60320/C19
16A, 250V MAX RATED OUTPUT

RECEPTACLES
IEC 60320/C13
10A, 250V MAX RATED OUTPUT

Notes:

This drawing and its specifications are the property of ENCONNEX and shall not be copied, reproduced, or used in whole or in part, as the basis for the manufacture or sale of items without written permission from ENCONNEX. This drawing is based upon the latest available information and is subject to change without notice.

| | | | |
|---|---|---|---|
| TOLERANCES LINEAR (mm) X = ± 1 X.X = ± 0.5 X.XX = ± 0.30 X.XXX = ± 0.130 ANGULAR X = 1° .X = 0.5° .XX = 0.25° | MATERIAL: | ENCONNEX 4670 AIRCENTER CIRCLE, RENO, NV 89502 | PART NUMBER: ECX-MV1236060-P |
| | DESCRIPTION: | | DESCRIPTION: 240V/32A,Single Phase, 42 outlets, 36 C13, 6 C19, 5kAIC breaker, IEC 60309 |
| | DEBUR AND BREAK SHARP EDGES/CORNERS AT 0.2mm MAX | DRAWN BY: Leo Liu | ORG DATE: 2019-06-19 |
| | | APPROVED BY: R. FAULKNER | REV DATE: |
| UNITS: mm [in] | INTERPRET TO ASME Y14.100 | SIZE: A2 / SCALE: 1 : 1 | SHEET: 1/2 / REV: A |

Notes/Instructions:

| REV | REV DATE | DESCRIPTION | APPROVAL |
|---|---|---|---|
| A | 2019-06-19 | RELEASE | |

NOTES:
1. INTERNAL WIRING:

| | |
|---|---|
| WIRE TYPE: | UL AWM 1015, 12 & 18AWG |
| LINE 1/R/X COLOR: | BROWN |
| EARTH GROUND COLOR: | GREEN/YELLOW STRIPE |
| NEUTRAL WIRE COLOR: | BLUE |

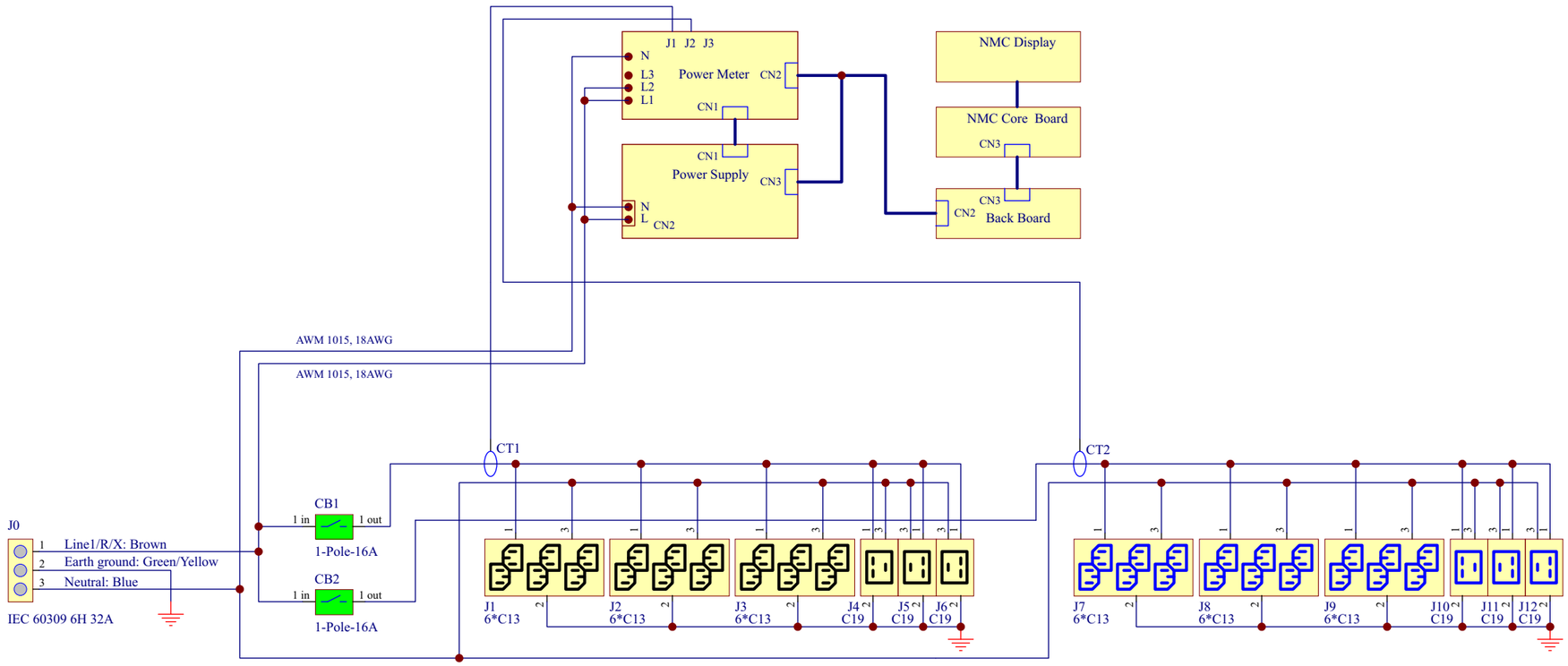


INTERNAL WIRING SCHEMATIC

## Notes:

This drawing and its specifications are the property of ENCONNEX and shall not be copied, reproduced, or used in whole or in part, as the basis for the manufacture or sale of items without written permission from ENCONNEX. This drawing is based upon the latest available information and is subject to change without notice.

| | | | |
|---|---|---|---|
| TOLERANCES LINEAR (mm) X = ± 1 X.X = ± 0.5 X.XX = ± 0.30 X.XXX = ± 0.130 ANGULAR X = 1° .X = 0.5° .XX = 0.25° | MATERIAL: | ENCONNEX 4670 AIRCENTER CIRCLE, RENO, NV 89502 | PART NUMBER: ECX-MV1236060-P |
| | DESCRIPTION: | | DESCRIPTION: Wiring Scheme |
| | DEBUR AND BREAK SHARP EDGES/CORNERS AT 0.2mm MAX | DRAWN BY: Jing Zhang | ORG DATE: 2019-06-19 |
| | | APPROVED BY: R. FAULKNER | REV DATE: |
| UNITS: mm [in] | INTERPRET TO ASME Y14.100 | SIZE: A4 / SCALE: 1 : 1 | SHEET: 2/2 / REV: A |