Notes/Instructions:

REV	REV DATE	DESCRIPTION	APPROVAL
A	2019-04-23	RELEASE	

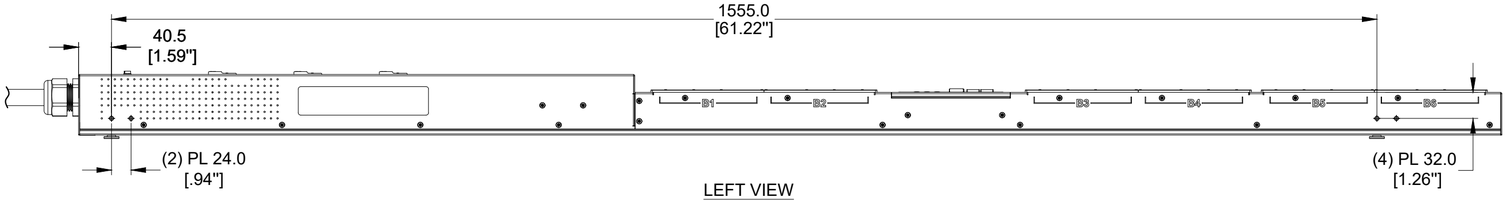

LEFT VIEW

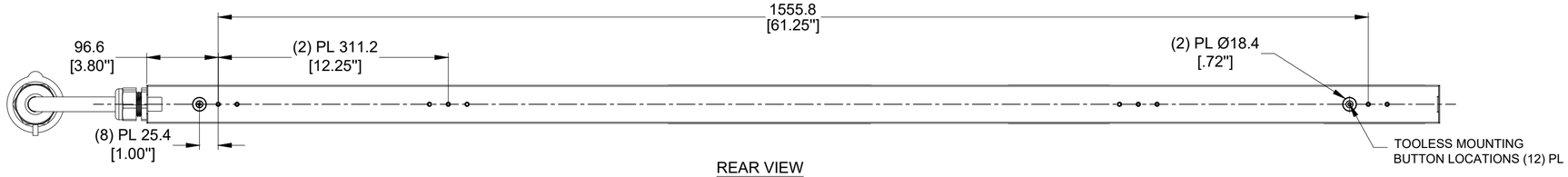

REAR VIEW

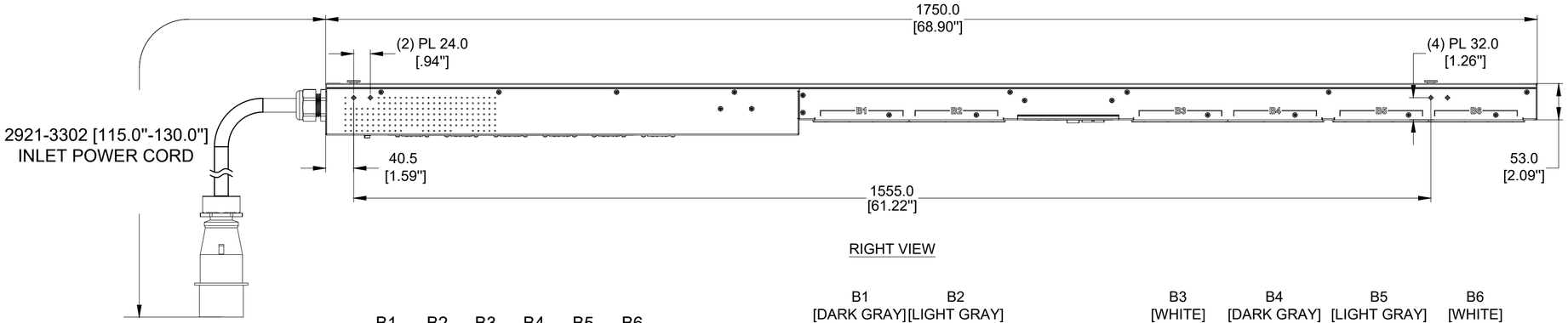

RIGHT VIEW

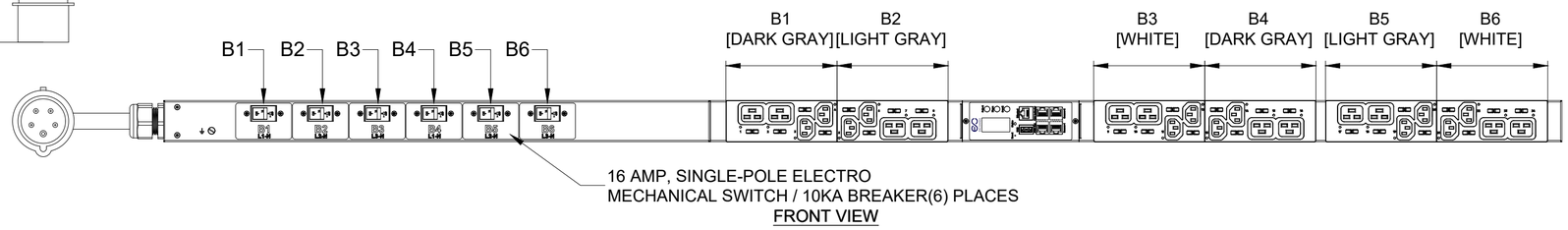

FRONT VIEW

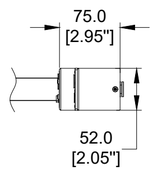

BOTTOM VIEW

PLUG/RECEPTACLE BLOCK

PLUG
IEC 60309, 4P 5W, 6H
IP44 (SPLASHPROOF)
32A, 346 - 415V MAX RATED INPUT

RECEPTACLES
IEC 60320/C19
16A, 250V MAX RATED OUTPUT

RECEPTACLES
IEC 60320/C13
10A, 250V MAX RATED OUTPUT

UNIT TYPE:	MONITORED SWITCHED
ORIENTATION:	VERTICAL, 0U FULL
OUTLET QTY&TYPE:	(12) C13, (12) C19
INPUT VOLTAGE:	200-240/346-415VAC
INPUT CURRENT:	32A
BREAKER QTY&TYPE:	(6) 16AMP, SINGLE-POLE,10KA
INPUT PHASE:	THREE-PHASE, WYE
RATED POWER:	22.0kVA
INPUT PLUG:	IEC 60309 3P+N+E 6H 32A
INPUT POWER CORD:	3m[10"], TOP FEED
REGULATORY STANDARD:	RoHS COMPLIANT

Notes:
This drawing and its specifications are the property of ENCONNEX and shall not be copied, reproduced, or used in whole or in part, as the basis for the manufacture or sale of items without written permission from ENCONNEX. This drawing is based upon the latest available information and is subject to change without notice.

TOLERANCES LINEAR (mm) X = ± 1 X.X = ± 0.5 X.XX = ± 0.30 X.XXX = ± 0.130 ANGULAR .X = 1° .X = 0.5° .XX = 0.25°	MATERIAL:	ENCONNEX 4670 AIRCENTER CIRCLE, RENO, NV 89502	PART NUMBER: ECX-SV1712120-T
	DESCRIPTION:		DESCRIPTION: 400V 3P 32A IPMetered/Outlet Switched(532P6) -12 C13/12 C19 -6x16A breakers
	DEBUR AND BREAK SHARP EDGES/CORNERS AT 0.2mm MAX	DRAWN BY: Leo Liu	ORG DATE: 2019-04-23
		APPROVED BY: R. FAULKNER	REV DATE:
UNITS: mm [in]	INTERPRET TO ASME Y14.100	SIZE: A2 / SCALE: 1 : 1	SHEET: 1/1 / REV: A

REV	REV DATE	DESCRIPTION	APPROVAL
A	2019-04-24	RELEASE	

Notes/Instructions:

ECX-SV1712120-T

Input Cable Type: H07RNF5G6

Internal Wire Type: UL AWM 1015, 105℃, 10/12/18AWG

1: Line1/R/X Wire Color = Brown
2: Line2/S/Y Wire Color = Black
3: Line3/T/Z Wire Color = White
4: Neutral Wire Color = Blue
5: Earth ground Wire Color = Green/Yellow (Stripe)

Input main Ground Terminal and CB Terminal: KST,RNYD5-5
Outlet Ground Terminal: KST,RNYDL5-4
Internal Wires (N and G Wire) are soldered to Outlet Terminal

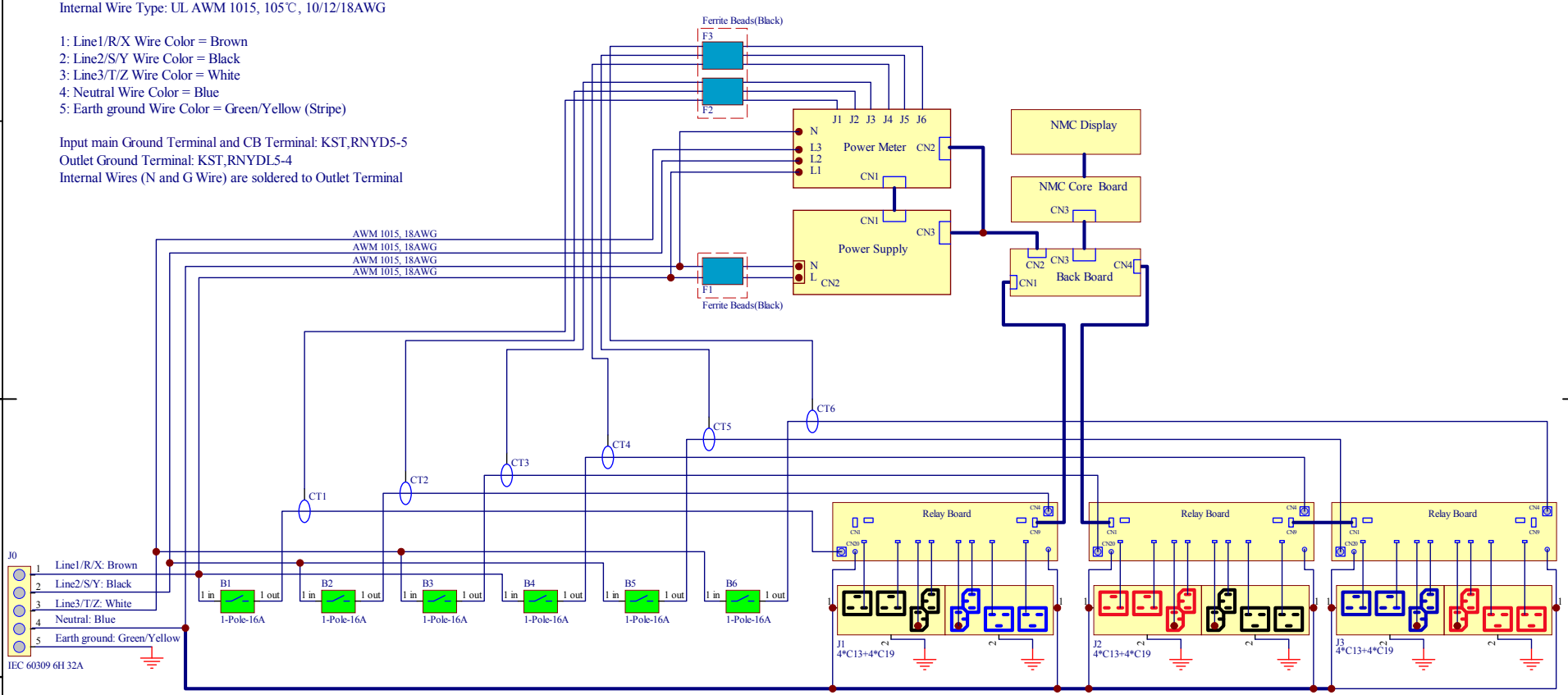

Notes:

This drawing and its specifications are the property of ENCONNEX and shall not be copied, reproduced, or used in whole or in part, as the basis for the manufacture or sale of items without written permission from ENCONNEX. This drawing is based upon the latest available information and is subject to change without notice.

TOLERANCES LINEAR (mm) X = ± 1 X.X = ± 0.5 X.XX = ± 0.30 X.XXX = ± 0.130 ANGULAR X = 1° .X = 0.5° .XX = 0.25°	MATERIAL:	ENCONNEX 4670 AIRCENTER CIRCLE, RENO, NV 89502	PART NUMBER: ECX-SV1712120-T
	DESCRIPTION:		DESCRIPTION: Wiring Scheme
	DEBUR AND BREAK SHARP EDGES/CORNERS AT 0.2mm MAX	DRAWN BY: SAM DING	ORG DATE: 2019-04-24
		APPROVED BY: R. FAULKNER	REV DATE:
UNITS: mm [in]	INTERPRET TO ASME Y14.100	SIZE: A4 / SCALE: 1 : 1	SHEET: 1/1 / REV: A