THIS DRAWING AND SPECIFICATIONS HEREIN ARE THE PROPERTY OF ENCONNEX LLC. AND SHALL NOT BE COPIED, REPRODUCED OR USED IN WHOLE OR IN PART, AS THE BASIS FOR THE MANUFACTURE OR SALE OF ITEMS WITHOUT THE WRITTEN PERMISSION OF ENCONNEX LLC. THIS DRAWING IS SUBJECT TO CHANGE WITHOUT NOTICE.

REVISIONS

REV.	SUFFIX	DESCRIPTION	DATE	APPROVED
A		Full Released	2021.1.11	FANCY FAN

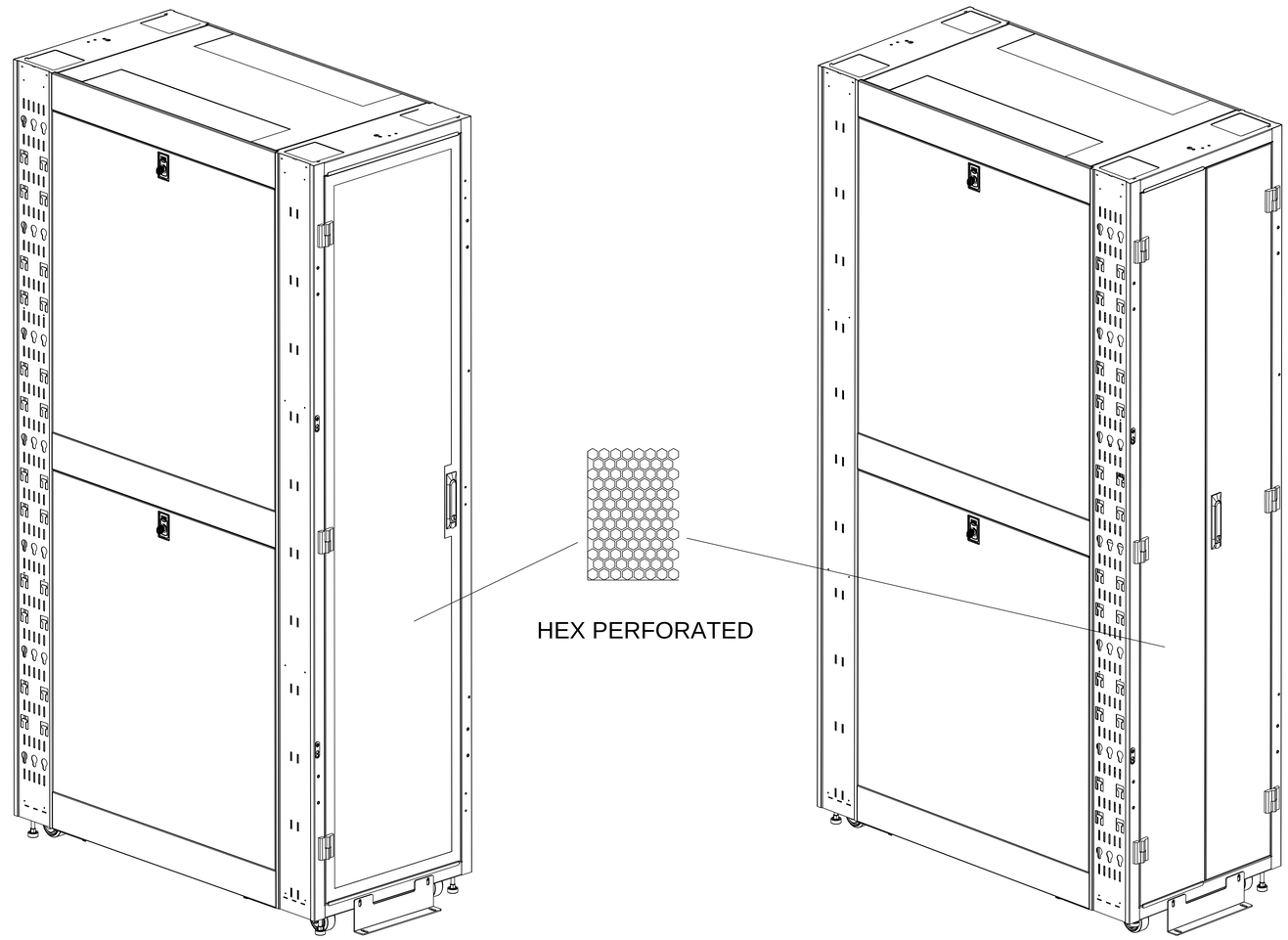

FRONT VIEW

REAR VIEW

ECX-DC-612XX-C3:

XX	-42 (42U HEIGHT) -45 (45U HEIGHT) -48 (48U HEIGHT) -52 (52U HEIGHT)

ENCONNEX

4670 AIRCENTER CIRCLE, RENO, NV89502

PRODUCT LINE: DC Cabinet

PART NUMBER: ECX-DC-612XX-C3

DESCRIPTION: DC Cabinet,600(W),1200(D),XXU(H)

THIRD ANGLE PROJECTION

DRAWING FILE NAME ECX-DC-612XX-C3	ENGINEER: FANCY FAN	ORG DATE: 2021.1.11
3D MODEL FILE NAME ECX-DC-612XX-C3	DRAWN: AMY ZHU	REV DATE: 2021.1.11
3D MODEL CONFIGURATION Default	ITEM WEIGHT (REFERENCE ONLY)	REV: A

UNITS:MM[IN]	INTERPRET TO ASME Y14.100	SIZE: B	SCALE:1:1	DO NOT SCALE DRAWING	SHEET:1/3

NOTES:
1.ROHS COMPLIANT
2.EIA-310-D
3.RAL 9005 POWDER COATING BY DEFAULT

THIS DRAWING AND SPECIFICATIONS HEREIN ARE THE PROPERTY OF ENCONNEX LLC. AND SHALL NOT BE COPIED, REPRODUCED OR USED IN WHOLE OR IN PART, AS THE BASIS FOR THE MANUFACTURE OR SALE OF ITEMS WITHOUT THE WRITTEN PERMISSION OF ENCONNEX LLC. THIS DRAWING IS SUBJECT TO CHANGE WITHOUT NOTICE.

PN	X(mm)	X+67(mm)	Y(mm)	Z(mm)
ECX-DC-61242-C3	1953.5	2020.5	206.5	1557.5
ECX-DC-61245-C3	2086.9	2153.9	273.2	1557.5
ECX-DC-61248-C3	2220.2	2287.2	184.1	1869.0
ECX-DC-61252-C3	2398.0	2465.0	273.0	1869.0

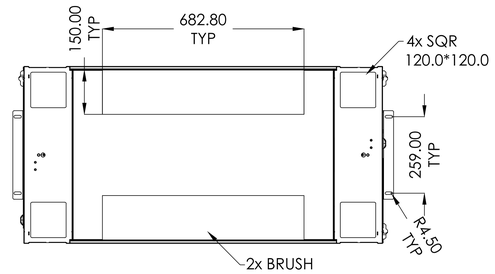

TOP VIEW

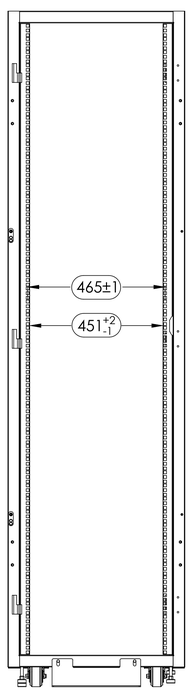

FRONT VIEW
(WITHOUT DOORS)

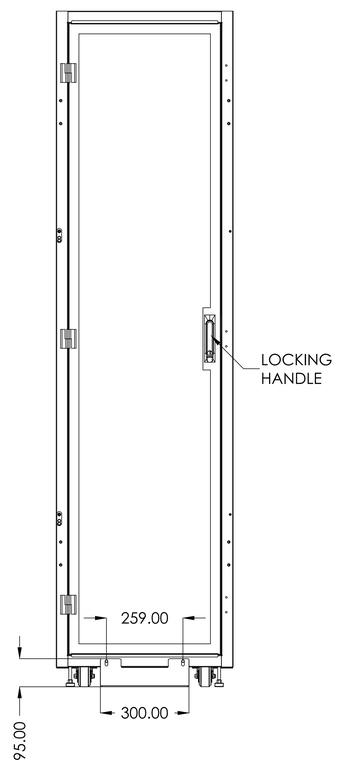

FRONT VIEW

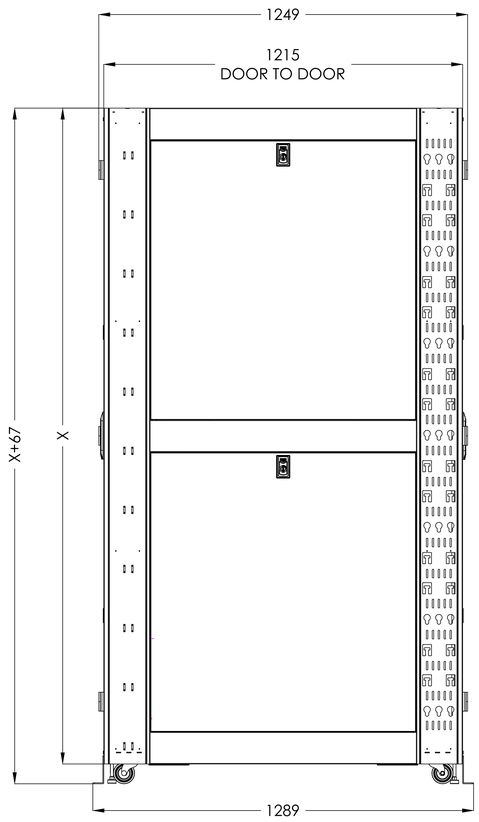

SIDE VIEW

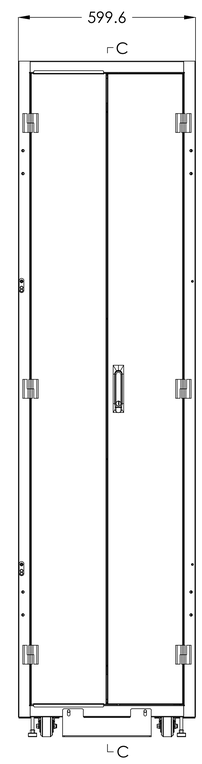

REAR VIEW

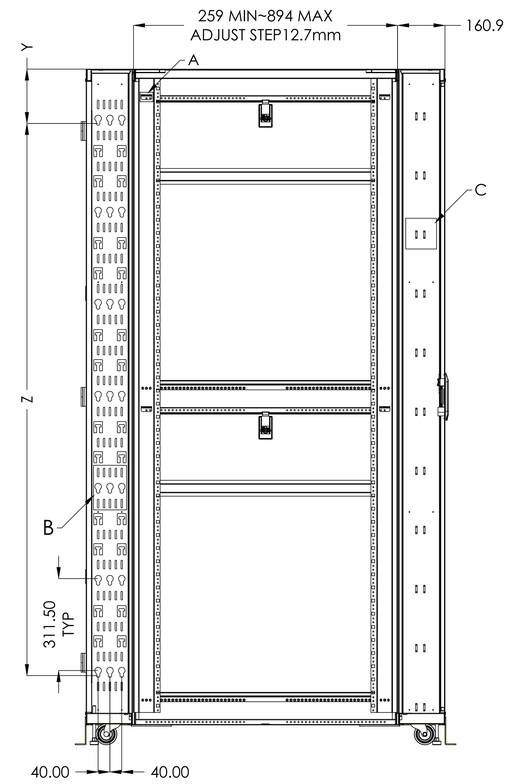

SECTIONAL VIEW
C-C

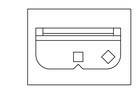

OBSERVATION HOLE
DETAIL A

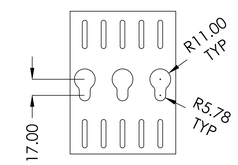

DETAIL B

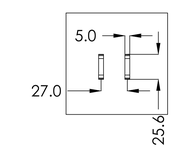

DETAIL C

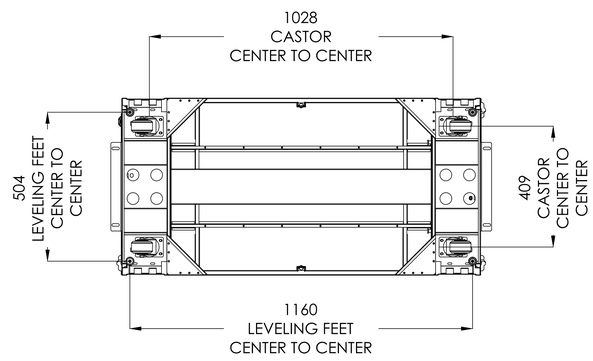

BOTTOM VIEW

ECX-DC-612XX-C3:

XX
-42 (42U HEIGHT)
-45 (45U HEIGHT)
-48 (48U HEIGHT)
-52 (52U HEIGHT)

ENCONNEX
4670 AIRCENTER CIRCLE, RENO, NV89502

PRODUCT LINE: DC Cabinet

PART NUMBER: ECX-DC-612XX-C3

DESCRIPTION: DC Cabinet,600(W),1200(D),XXU(H)

THIRD ANGLE PROJECTION

DRAWING FILE NAME ECX-DC-612XX-C3	ENGINEER: FANCY FAN	ORG DATE: 2021.1.11	
3D MODEL FILE NAME ECX-DC-612XX-C3	DRAWN: AMY ZHU	REV DATE: 2021.1.11	
3D MODEL CONFIGURATION Default	ITEM WEIGHT (REFERENCE ONLY)	REV: A	

UNITS:MM[IN]	INTERPRET TO ASME Y14.100	SIZE: B	SCALE:1:1	DO NOT SCALE DRAWING	SHEET:2/3

THIS DRAWING AND SPECIFICATIONS HEREIN ARE THE PROPERTY OF ENCONNEX LLC. AND SHALL NOT BE COPIED, REPRODUCED OR USED IN WHOLE OR IN PART, AS THE BASIS FOR THE MANUFACTURE OR SALE OF ITEMS WITHOUT THE WRITTEN PERMISSION OF ENCONNEX LLC. THIS DRAWING IS SUBJECT TO CHANGE WITHOUT NOTICE.

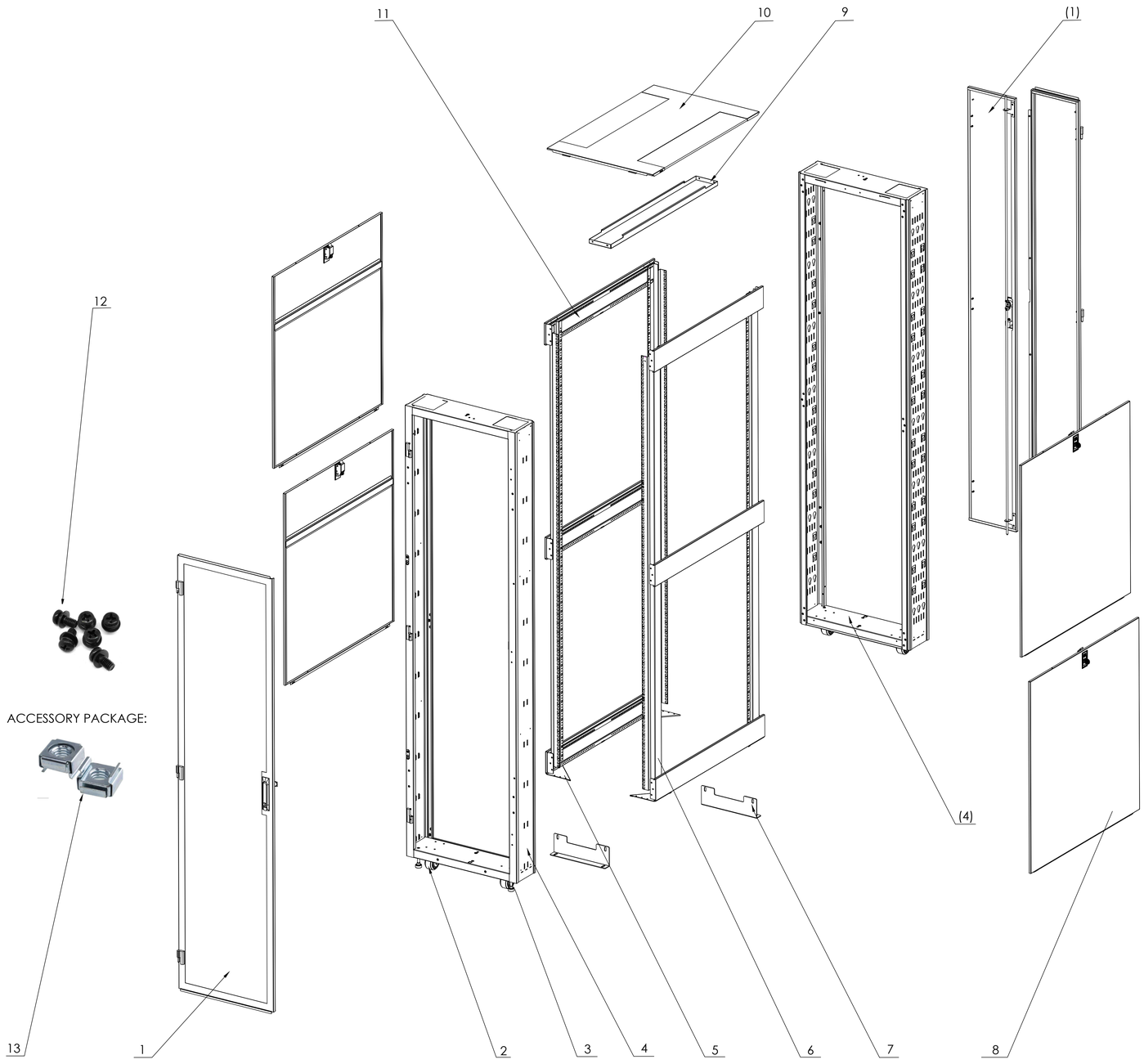

ITEM	PN				DESCRIPTION	QTY
13	ECX-DC-CAGENUT-M6-50				Enconnex Cage Nuts and Screws, Zinc plated, M6, 1/2in, 50/PKG	50pcs/set
12	ECX-DC-ASM-HWKIT				DC Series Assemble Harewares Kits	9pcs/set
11	ECX-DC-HBEAM-12				DC Series Cabinet Horizontal Beam	6pcs/set
10	ECX-DC-ROOF-612-02				DC Series Cabinet 600mm Top Moveable w/ full length brush	1pcs
9	ECX-DC-RBEAM-12				DC Series Cabinet Roof Beam	1pcs/set
8	ECX-DC-4212-PANKIT	ECX-DC-4512-PANKIT	ECX-DC-4812-PANKIT	ECX-DC-5212-PANKIT	DC Series Cabinet Side Panel 1200mm depth 42U/45U/48U/52U Height	4pcs/set
7	ECX-DC-LBKT				DC Series Cabinet L bracket	2pcs/set
6	ECX-DC-PMA-642	ECX-DC-PMA-645	ECX-DC-PMA-648	ECX-DC-PMA-652	DC Series Cabinet 600mm 42U/45u/48u/52u Mounting Rail Kits	4pcs/set
5	ECX-DC-STFN				DC Series Cabinet Stiffener	4pcs/set
4	ECX-DC-FRM-642	ECX-DC-FRM-645	ECX-DC-FRM-648	ECX-DC-FRM-652	DC Series Cabinet 600mm 42U/45U/48U/52U Frame Set, Front&Rear	1pair/set
3	ECX-DC-FEET-01				DC Series leveling feet M10*80mm	4pcs/set
2	ECX-DC-CSTR3				DC Series 3” caster 450KG	4pcs/set
1	ECX-DC-642-DRKIT	ECX-DC-645-DRKIT	ECX-DC-648-DRKIT	ECX-DC-652-DRKIT	DC Series Cabinet Front Flat &Rear Split Flat Hex Hole 42U/45U/48U/52U Height, 600W,1200D	1set
	EXC-DC-61242-C3	ECX-DC-61245-C3	ECX-DC-61248-C3	ECX-DC-61252-C3		

ECX-DC-612XX-C3:

XX
-42 (42U HEIGHT)
-45 (45U HEIGHT)
-48 (48U HEIGHT)
-52 (52U HEIGHT)

ENCONNEX

4670 AIRCENTER CIRCLE, RENO, NV89502

PRODUCT LINE: DC Cabinet

PART NUMBER: ECX-DC-612XX-C3

DESCRIPTION: DC Cabinet,600(W),1200(D),XXU(H)

THIRD ANGLE PROJECTION

DRAWING FILE NAME ECX-DC-612XX-C3	ENGINEER: FANCY FAN	ORG DATE: 2021.1.11
3D MODEL FILE NAME ECX-DC-612XX-C3	DRAWN: AMY ZHU	REV DATE: 2021.1.11
3D MODEL CONFIGURATION Default	ITEM WEIGHT (REFERENCE ONLY)	REV: A

UNITS:MM[IN] | INTERPRET TO ASME Y14.100 | SIZE: B | SCALE:1:1 | DO NOT SCALE DRAWING | SHEET:3/3