Notes/Instructions:

REV	REV DATE	DESCRIPTION	APPROVAL
A	2020-06-05	RELEASE	SD/RF

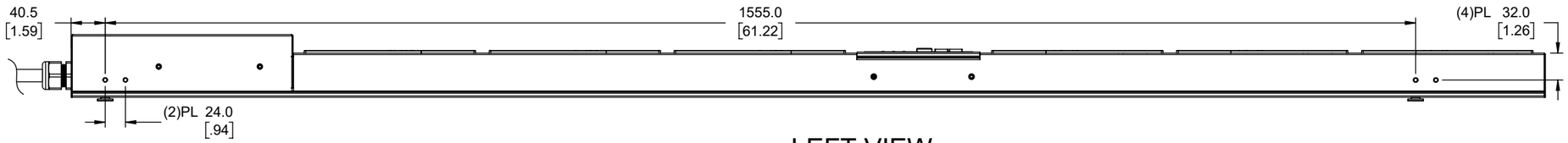

LEFT VIEW

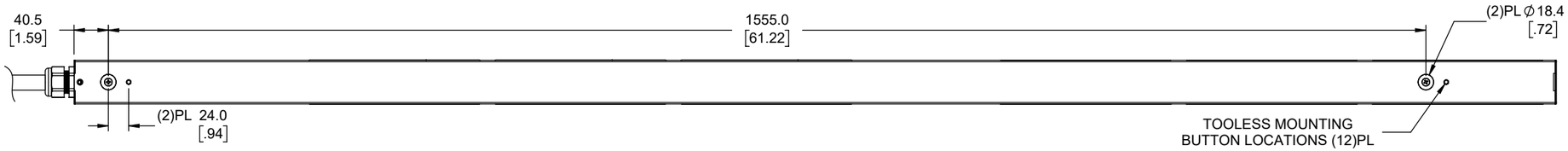

REAR VIEW

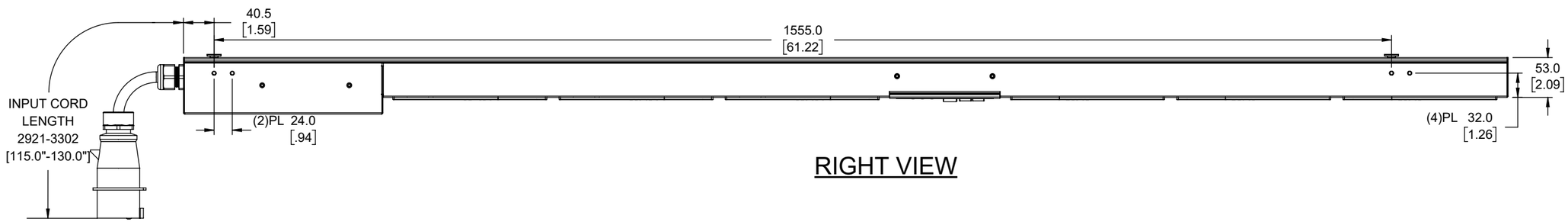

RIGHT VIEW

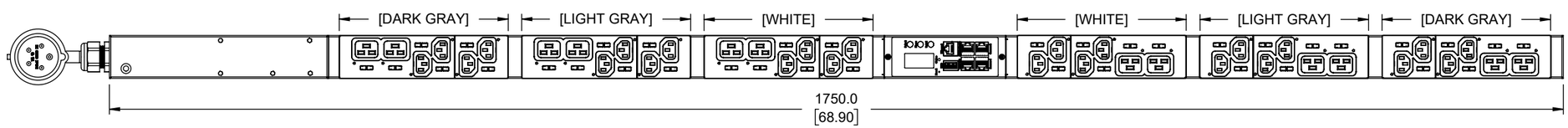

FRONT VIEW

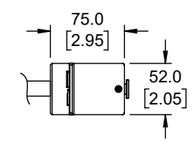

BOTTOM VIEW

PLUG/RECEPTACLE BLOCK

PLUG
IEC 60309, 4P 5W, 6H
IP44 (SPLASHPROOF)
16A 346-415V MAX RATED INPUT

RECEPTACLES
IEC 60320/C19
16A, 250V MAX RATED OUTPUT

RECEPTACLES
IEC 60320/C13
10A, 250V MAX RATED OUTPUT

UNIT TYPE:	MONITORED & SWITCHED PER OUTLET
ORIENTATION:	VERTICAL, 0U FULL
OUTLET QTY & TYPE:	(24)C13, (12)C19
INPUT VOLTAGE:	346-415VAC
INPUT CURRENT:	16A
BREAKER QTY & TYPE:	NA
INPUT PHASE:	THREE-PHASE (WYE)
RATED POWER:	11.5 kVA
INPUT PLUG:	IEC 60309 3P+N+E 6H
INPUT POWER CORD:	3m[10'], TOP FEED
REGULATORY STANDARD:	RoHS COMPLIANT

Notes:
This drawing and its specifications are the property of ENCONNEX and shall not be copied, reproduced, or used in whole or in part, as the basis for the manufacture or sale of items without written permission from ENCONNEX. This drawing is based upon the latest available information and is subject to change without notice.

TOLERANCES LINEAR (mm) X = ± 1 X.X = ± 0.5 X.XX = ± 0.30 X.XXX = ± 0.130 ANGULAR X = 1° .X = 0.5° .XX = 0.25°	MATERIAL: DESCRIPTION:	ENCONNEX 4670 AIRCENTER CIRCLE, RENO, NV 89502	PART NUMBER: ECX-WV1624120-R DESCRIPTION:
	DEBUR AND BREAK SHARP EDGES/CORNERS AT 0.2mm MAX	DRAWN BY: huang APPROVED BY: Hanson	ORG DATE: 2020-06-05 REV DATE: 2020-06-05
UNITS: mm [in]	INTERPRET TO ASME Y14.100	SIZE: B SCALE: 1 : 1	SHEET: 1/2 REV: A

Notes/Instructions:

REV	REV DATE	DESCRIPTION	APPROVAL
A	2020-06-05	RELEASE	SD/RF

Input Cable Type: H07RNF5G4

Internal Wire Type: UL AWM 1015, 105℃,12/18AWG

1: Line1/R/X Wire Color = Brown
2: Line2/S/Y Wire Color = Black
3: Line3/T/Z Wire Color = White
4: Neutral Wire Color = Blue
5: Earth ground Wire Color = Green/Yellow (Stripe)

Input main Ground Terminal and CB Terminal: KST,RNYD5-5
Outlet Ground Terminal: KST,RNYDL5-4
Internal Wires (N and G Wire) are soldered to Outlet Terminal

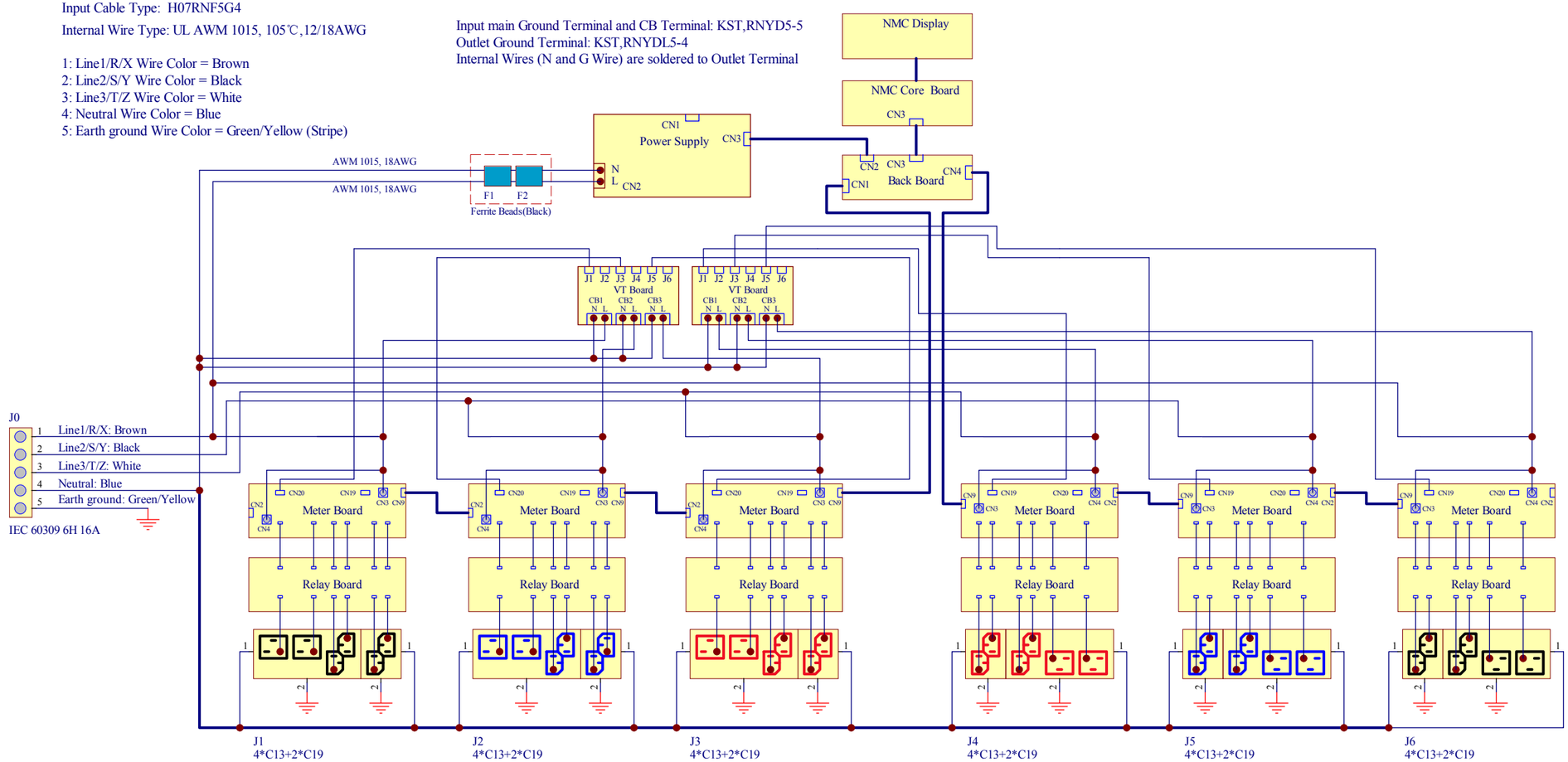

Notes:
This drawing and its specifications are the property of ENCONNEX and shall not be copied, reproduced, or used in whole or in part, as the basis for the manufacture or sale of items without written permission from ENCONNEX. This drawing is based upon the latest available information and is subject to change without notice.

TOLERANCES LINEAR (mm) X = ± 1 X.X = ± 0.5 X.XX = ± 0.30 X.XXX = ± 0.130 ANGULAR X = 1° .X = 0.5° .XX = 0.25°	MATERIAL: DESCRIPTION:	ENCONNEX 4670 AIRCENTER CIRCLE, RENO, NV 89502	PART NUMBER: ECX-WV1624120-R DESCRIPTION:
	DEBUR AND BREAK SHARP EDGES/CORNERS AT 0.2mm MAX	DRAWN BY: huang APPROVED BY: Hanson	ORG DATE: 2020-06-05 REV DATE: 2020-06-05
UNITS: mm [in]	INTERPRET TO ASME Y14.100	SIZE: B SCALE: 1 : 1	SHEET: 2/2 REV: A