REV	REV DATE	DESCRIPTION	APPROVAL
0	08/22/2019	RELEASE	KP/RF

Notes/Instructions:

1. 100% open circuit and short circuit;
2. On-resistance: Finished product length<=3M, 1.6 ohm(Max.);
   3M<Finished product length<=5M, 2.0 ohm(Max.)
3. Capacitance: 50nF±1 0nF(Applicable to two pairs of signal cables:Tx+,Tx-,Rx+,Rx-);
4. High voltage: OFF
5. High frequency test the characteristic impedance 100±15 Ohm
6. S parameter from SFP+standard SFF-8431
7. PCB without encryption.

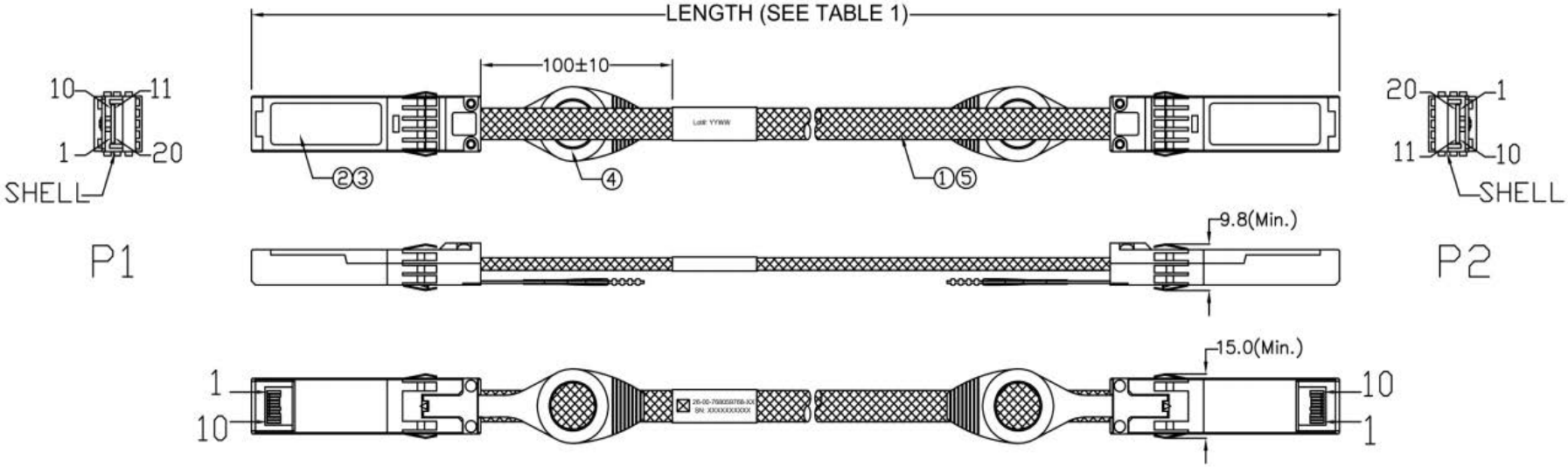

No.	Name	Description	Qty.	Remark
⑤	Weaving nets	A piece ∅.25, TOTAL OF 48,flate width 6.0mm, PET, flame retardant VW-1, the type:1250480	BOM	
④	Pull-Tab	Match the flat cable shell	2	
③	Shell	Zinc die cast with Bright nickel plating	2	
②	PCBA	FR4	2	
①	Cable	Mini SAS HD cable SL8802/04-40DN5-00	BOM	

Notes:

This drawing and its specifications are the property of ENCONNEX and shall not be copied, reproduced, or used in whole or in part, as the basis for the manufacture or sale of items without written permission from ENCONNEX. This drawing is based upon the latest available information and is subject to change without notice.

TOLERANCES LINEAR (mm) X = ± 1 X.X = ± 0.5 X.XX = ± 0.30 X.XXX = ± 0.130 ANGULAR X = 1° .X = 0.5° .XX = 0.25°	MATERIAL:	ENCONNEX 4670 AIRCENTER CIRCLE, RENO, NV 89502	PART NUMBER: ECX-SFP-DAC
	DESCRIPTION:		DESCRIPTION: SFP+(10G) DAC ECX-SFP-DAC
	DEBUR AND BREAK SHARP EDGES/CORNERS AT 0.2mm MAX	DRAWN BY: KOMAL PARAB / APPROVED BY: R. FAULKNER	ORG DATE: 08-22-2019 / REV DATE: 08-22-2019
UNITS: mm [in]	INTERPRET TO ASME Y14.100	SIZE: A4 / SCALE: N/A	SHEET: 1/2 / REV: A

REV	REV DATE	DESCRIPTION	APPROVAL
0	08/22/2019	RELEASE	KP/RF

Notes/Instructions:
The second line.SIN: S-XXXXXXXX-XXXX, 10 bits .
1.S:Prefix,SFP.
2.The (2-3) bits : product length.for ex ample 0.5m is 05 , and so on.
3.The (4) bits : product year,2011 is A, 2012 is B, and so on.
4.The (5-6) bits : product week.the first week is 01, and so on
5.The (7-10) bits: production serial number,from 0001 to 9999 .
6. High Speed Copper cabling compatibility and length mentioned in Table 1

Label:

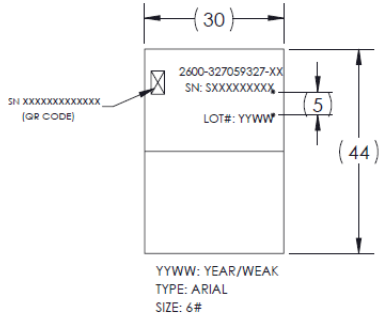

CABLE CONNECTION

PCBA Unwired-size PIN

P1/P2	
PIN#	SYMBOL
1	VeeT
2	Tx_Fault
3	Tx_Disable
4	SDA
5	SCL
6	Mod_ABS
7	RS0
8	Rx_LOS
9	RS1
10	VeeR

PCBA wired-size PIN

P1		P2	
PIN#	SYMBOL	PIN#	SYMBOL
11	GND	20	GND
12	Rx-	19	Tx-
13	Rx+	18	Tx+
14	GND	17	GND
15	-	16	-
16	-	15	-
17	GND	14	GND
18	Tx+	13	Rx+
19	Tx-	12	Rx-
20	GND	11	GND

REMARK:"GND "for the PCB 's earth wiree PIN bit

TABLE 1:

High Speed Copper Cabling	Part Number	Compatibility	Length	AWG	Type
SFP+(10G) DAC	ECX-SFP-DAC-JP-0.5M	Juniper	0.5M	30 AWG	Passive
	ECX-SFP-DAC-JP-1M		1M	30 AWG	
	ECX-SFP-DAC-JP-2M		2M	30 AWG	
	ECX-SFP-DAC-JP-3M		3M	30 AWG	
	ECX-SFP-DAC-JP-5M		5M	24 AWG	
	ECX-SFP-DAC-JP-7M		7M	24 AWG	
	ECX-SFP-DAC-CS-0.5M	Cisco	0.5M	30 AWG	
	ECX-SFP-DAC-CS-1M		1M	30 AWG	
	ECX-SFP-DAC-CS-2M		2M	30 AWG	
	ECX-SFP-DAC-CS-3M		3M	30 AWG	
	ECX-SFP-DAC-CS-5M		5M	24 AWG	
	ECX-SFP-DAC-CS-7M		7M	24 AWG	
	ECX-SFP-DAC-BR-0.5M	Brocade	0.5M	30 AWG	
	ECX-SFP-DAC-BR-1M		1M	30 AWG	
	ECX-SFP-DAC-BR-2M		2M	30 AWG	
	ECX-SFP-DAC-BR-3M		3M	30 AWG	
	ECX-SFP-DAC-BR-5M		5M	24 AWG	
	ECX-SFP-DAC-BR-7M		7M	24 AWG	
	ECX-SFP-DAC-AR-0.5M	Arista	0.5M	30 AWG	
	ECX-SFP-DAC-AR-1M		1M	30 AWG	
	ECX-SFP-DAC-AR-2M		2M	30 AWG	
	ECX-SFP-DAC-AR-3M		3M	30 AWG	
	ECX-SFP-DAC-AR-5M		5M	24 AWG	
	ECX-SFP-DAC-AR-7M		7M	24 AWG	

Notes:

This drawing and its specifications are the property of ENCONNEX and shall not be copied, reproduced, or used in whole or in part, as the basis for the manufacture or sale of items without written permission from ENCONNEX. This drawing is based upon the latest available information and is subject to change without notice.

TOLERANCES LINEAR (mm) X = ± 1 X.X = ± 0.5 X.XX = ± 0.30 X.XXX = ± 0.130 ANGULAR X = 1° .X = 0.5° .XX = 0.25°	MATERIAL:	ENCONNEX	PART NUMBER: ECX-SFP-DAC
	FINISH:	4670 AIRCENTER CIRCLE, RENO, NV 89502	DESCRIPTION: SFP+(10G) DAC ECX-SFP-DAC
	DEBUR AND BREAK SHARP EDGES/CORNERS AT 0.2mm MAX	DRAWN BY: KOMAL PARAB / APPROVED BY: R. FAULKNER	ORG DATE: 08/22/2019 / REV DATE: 08/22/2019
UNITS: mm [in]	INTERPRET TO ASME Y14.100	SIZE: A4 / SCALE: N/A	SHEET: 2/2 / REV: A