Notes/Instructions:

REV	REV DATE	DESCRIPTION	APPROVAL
A	2019-06-19	RELEASE	

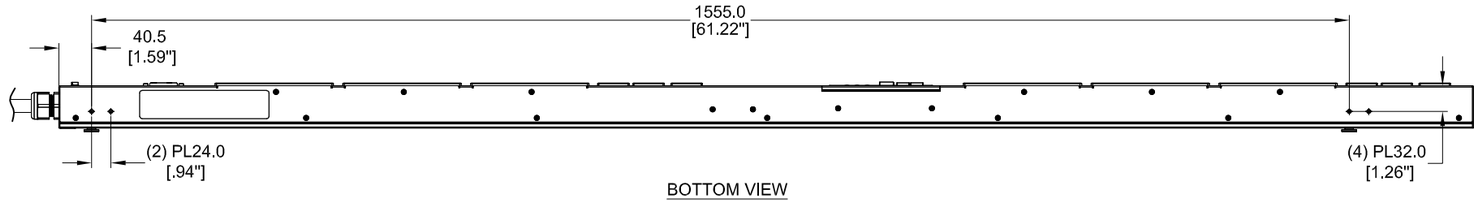

BOTTOM VIEW

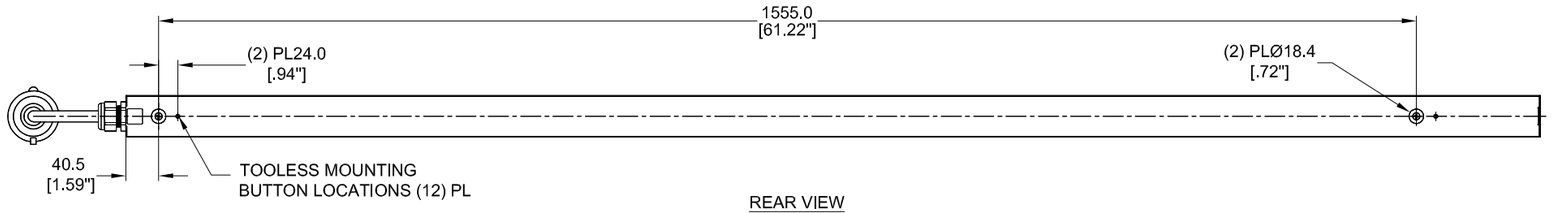

REAR VIEW

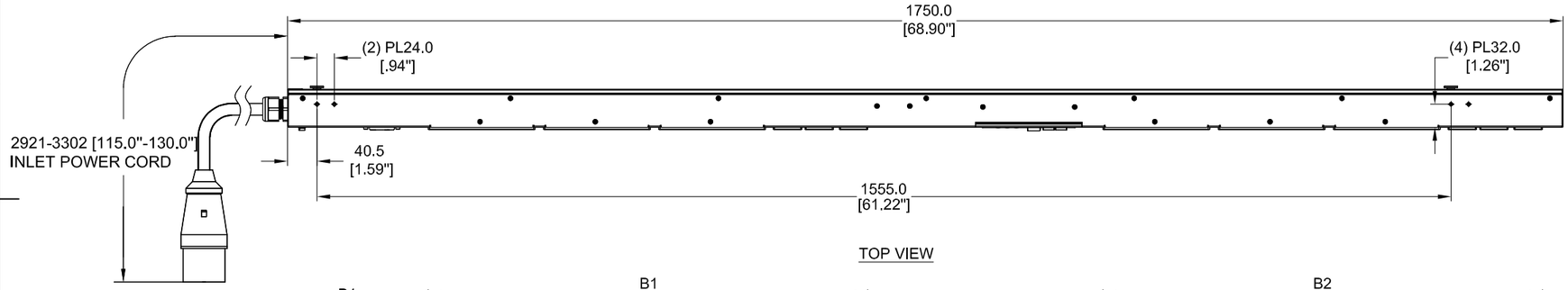

TOP VIEW

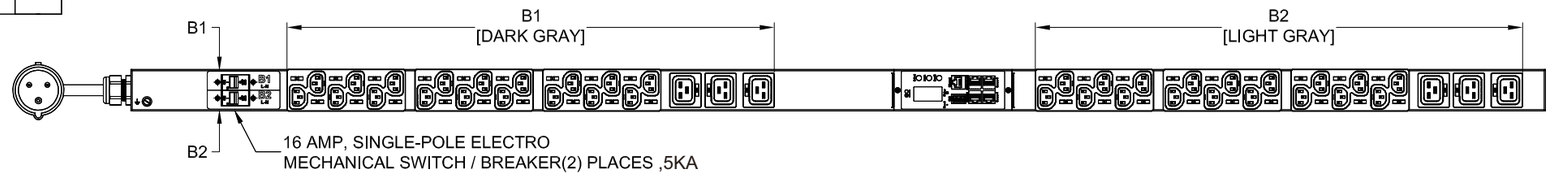

FRONT VIEW

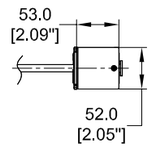

BOTTOM VIEW

SPECIFICATION:

1. STANDARD:

UNIT TYPE:	MONITORED INPUT
ORIENTATION:	VERTICAL, 0U FULL
OUTLET QTY&TYPE:	(36) C13, (6) C19
INPUT VOLTAGE:	200-240VAC
INPUT CURRENT:	32A
BREAKER QTY&TYPE:	(2) 16AMP, SINGLE-POLE
INPUT PHASE:	SINGLE-PHASE
RATED POWER:	7.4kVA
INPUT PLUG:	IEC 60309 2P+E 6H 32A
INPUT POWER CORD:	3m [10'], TOP FEED
REGULATORY STANDARD:	RoHS COMPLIANT

PLUG/RECEPTACLE BLOCK

PLUG
IEC 60309, 2P 3W, 6H
IP44 (SPLASHPROOF)
32A, 200-250V MAX RATED INPUT

RECEPTACLES
IEC 60320/C19
16A, 250V MAX RATED OUTPUT

RECEPTACLES
IEC 60320/C13
10A, 250V MAX RATED OUTPUT

Notes:

This drawing and its specifications are the property of ENCONNEX and shall not be copied, reproduced, or used in whole or in part, as the basis for the manufacture or sale of items without written permission from ENCONNEX. This drawing is based upon the latest available information and is subject to change without notice.

TOLERANCES LINEAR (mm) X = ± 1 X.X = ± 0.5 X.XX = ± 0.30 X.XXX = ± 0.130 ANGULAR X = 1° .X = 0.5° .XX = 0.25°	MATERIAL:	ENCONNEX 4670 AIRCENTER CIRCLE, RENO, NV 89502	PART NUMBER: ECX-MV1236060-P
	DESCRIPTION:		DESCRIPTION: 240V/32A,Single Phase, 42 outlets, 36 C13, 6 C19, 5kAIC breaker, IEC 60309
	DEBUR AND BREAK SHARP EDGES/CORNERS AT 0.2mm MAX	DRAWN BY: Leo Liu	ORG DATE: 2019-06-19
		APPROVED BY: R. FAULKNER	REV DATE:
UNITS: mm [in]	INTERPRET TO ASME Y14.100	SIZE: A2 / SCALE: 1 : 1	SHEET: 1/2 / REV: A

Notes/Instructions:

REV	REV DATE	DESCRIPTION	APPROVAL
A	2019-06-19	RELEASE	

NOTES:
1. INTERNAL WIRING:

WIRE TYPE:	UL AWM 1015, 12 & 18AWG
LINE 1/R/X COLOR:	BROWN
EARTH GROUND COLOR:	GREEN/YELLOW STRIPE
NEUTRAL WIRE COLOR:	BLUE

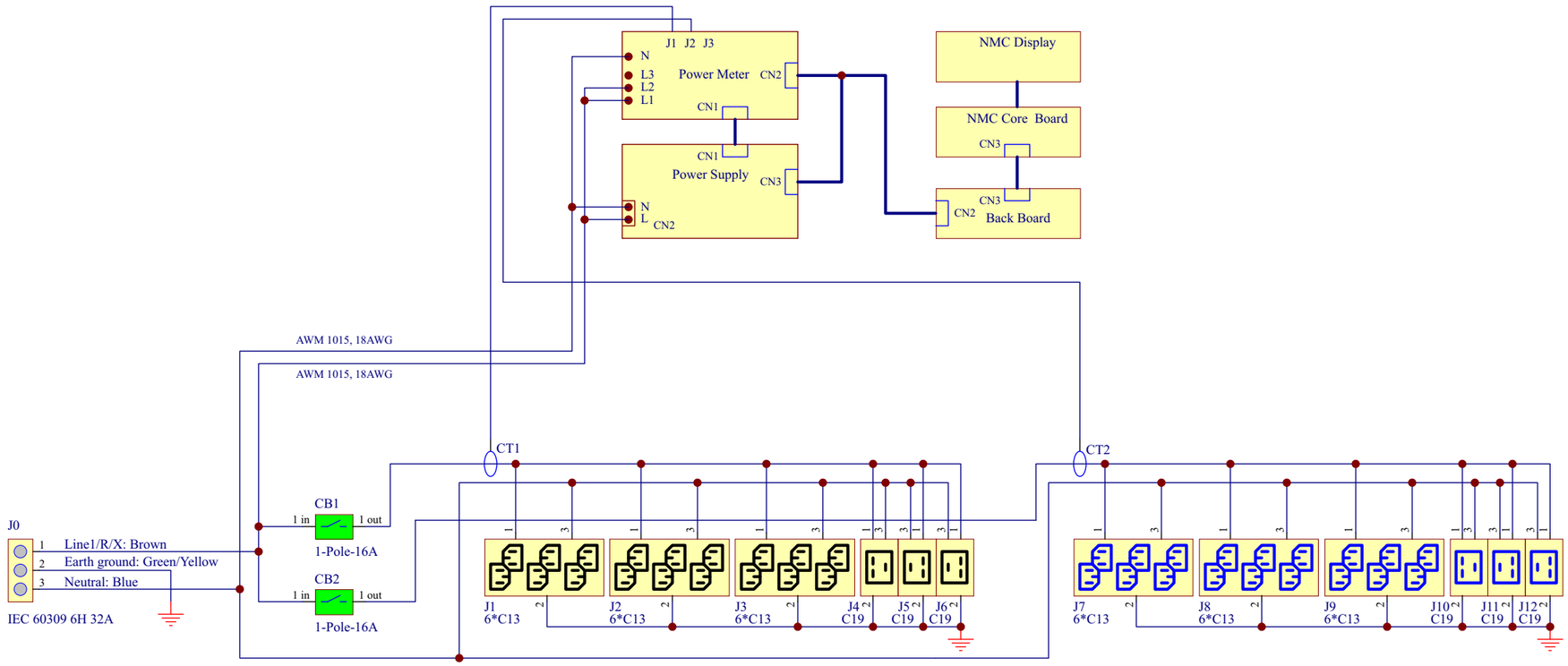

INTERNAL WIRING SCHEMATIC

Notes:

This drawing and its specifications are the property of ENCONNEX and shall not be copied, reproduced, or used in whole or in part, as the basis for the manufacture or sale of items without written permission from ENCONNEX. This drawing is based upon the latest available information and is subject to change without notice.

TOLERANCES LINEAR (mm) X = ± 1 X.X = ± 0.5 X.XX = ± 0.30 X.XXX = ± 0.130 ANGULAR X = 1° .X = 0.5° .XX = 0.25°	MATERIAL:	ENCONNEX	PART NUMBER: ECX-MV1236060-P
	DESCRIPTION:	4670 AIRCENTER CIRCLE, RENO, NV 89502	DESCRIPTION: Wiring Scheme
	DEBUR AND BREAK SHARP EDGES/CORNERS AT 0.2mm MAX	DRAWN BY: Jing Zhang	ORG DATE: 2019-06-19
		APPROVED BY: R. FAULKNER	REV DATE:
UNITS: mm [in]	INTERPRET TO ASME Y14.100	SIZE: A4 / SCALE: 1 : 1	SHEET: 2/2 / REV: A