Notes/Instructions:

REV	REV DATE	DESCRIPTION	APPROVAL
A	2019-05-14	RELEASE	SD/RF

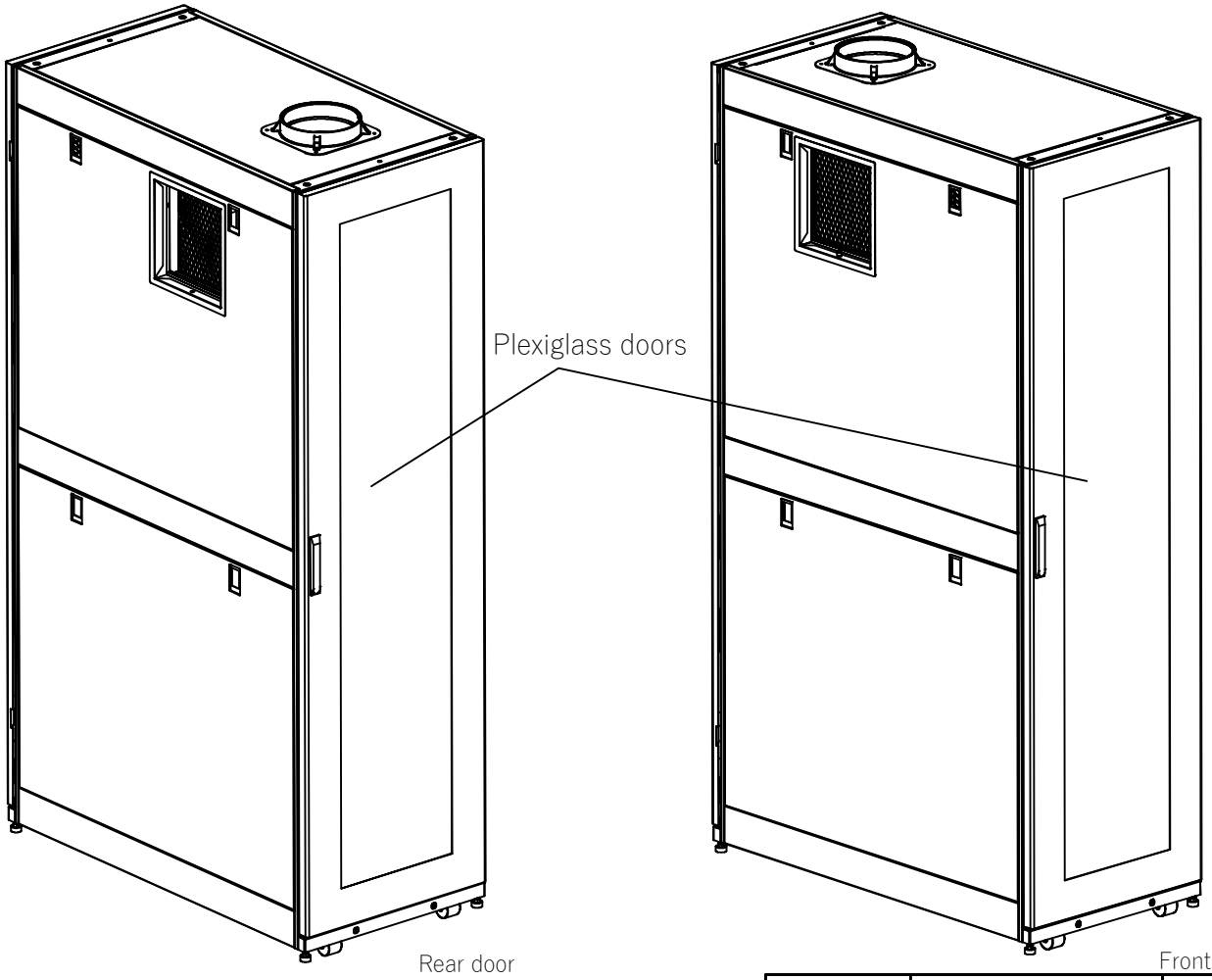

Notes:

This drawing and its specifications are the property of ENCONNEX and shall not be copied, reproduced, or used in whole or in part, as the basis for the manufacture or sale of items without written permission from ENCONNEX. This drawing is based upon the latest available information and is subject to change without notice.

TOLERANCES LINEAR (mm) X = ± 1 X.X = ± 0.5 X.XX = ± 0.30 X.XXX = ± 0.130 ANGULAR X = 1° .X = 0.5° .XX = 0.25°	MATERIAL:METAL FINISH:	ENCONNEX 4670 AIRCENTER CIRCLE, RENO, NV 89502	PART NUMBER: ECX-ER5M-42U60 DESCRIPTION: EDGERACK 600mm W X 1200mm D X 42U
	DEBUR AND BREAK SHARP EDGES/CORNERS AT 0.2mm MAX	DRAWN BY: SAM DING APPROVED BY: R. FAULKNER	ORG DATE: 2019-05-14 REV DATE: 2019-05-14
UNITS: mm [in]	INTERPRET TO ASME Y14.100	SIZE: A4 SCALE: N/A	SHEET: 1/5 REV: A

Notes/Instructions:

REV	REV DATE	DESCRIPTION	APPROVAL
A	2019-05-14	RELEASE	SD/RF

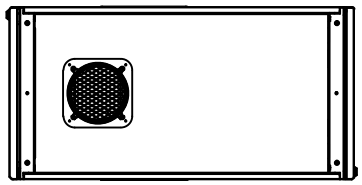

Top View

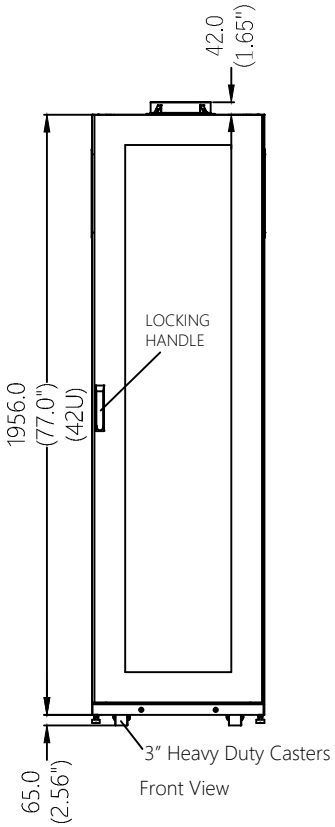

Front View

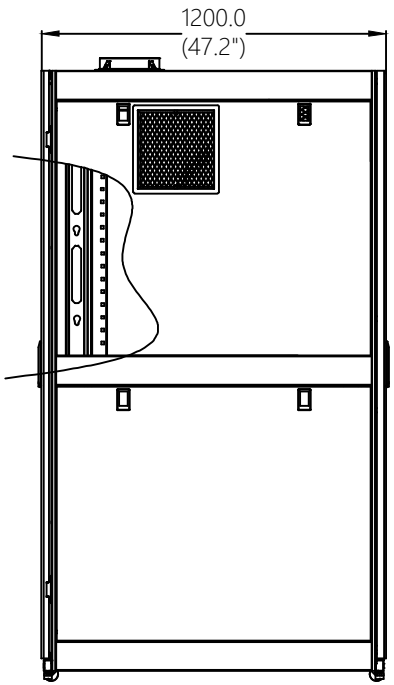

Side View

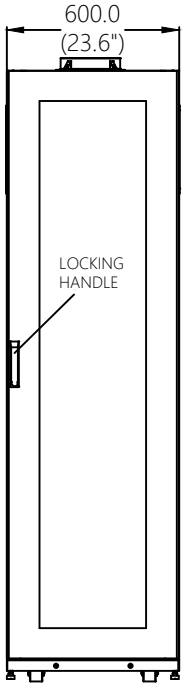

Rear View

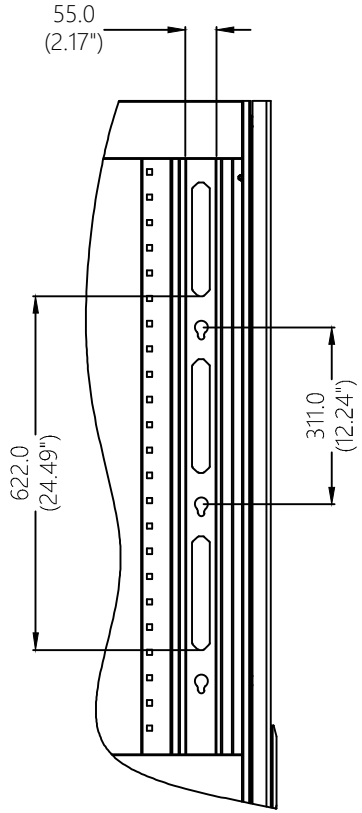

Notes:

This drawing and its specifications are the property of ENCONNEX and shall not be copied, reproduced, or used in whole or in part, as the basis for the manufacture or sale of items without written permission from ENCONNEX. This drawing is based upon the latest available information and is subject to change without notice.

TOLERANCES LINEAR (mm) X = ± 1 X.X = ± 0.5 X.XX = ± 0.30 X.XXX = ± 0.130 ANGULAR X = 1° .X = 0.5° .XX = 0.25°	MATERIAL:METAL FINISH:	ENCONNEX 4670 AIRCENTER CIRCLE, RENO, NV 89502	PART NUMBER: ECX-ER5M-42U60 DESCRIPTION: EDGERACK 600mm W X 1200mm D X 42U
	DEBUR AND BREAK SHARP EDGES/CORNERS AT 0.2mm MAX	DRAWN BY: SAM DING APPROVED BY: R. FAULKNER	ORG DATE: 2019-05-14 REV DATE: 2019-05-14
UNITS: mm [in]	INTERPRET TO ASME Y14.100	SIZE: A4 SCALE: N/A	SHEET: 2/5 REV: A

Notes/Instructions:

REV	REV DATE	DESCRIPTION	APPROVAL
A	2019-05-14	RELEASE	SD/RF

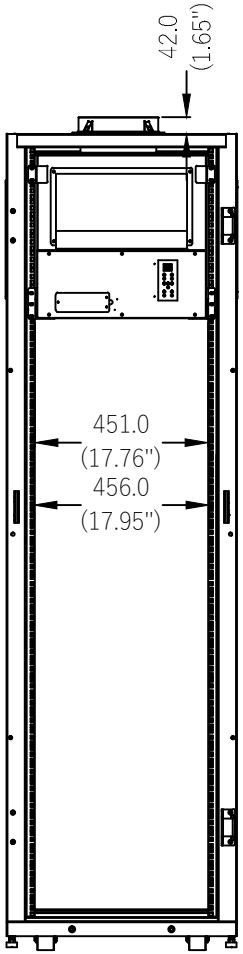

Front View
(without front door)

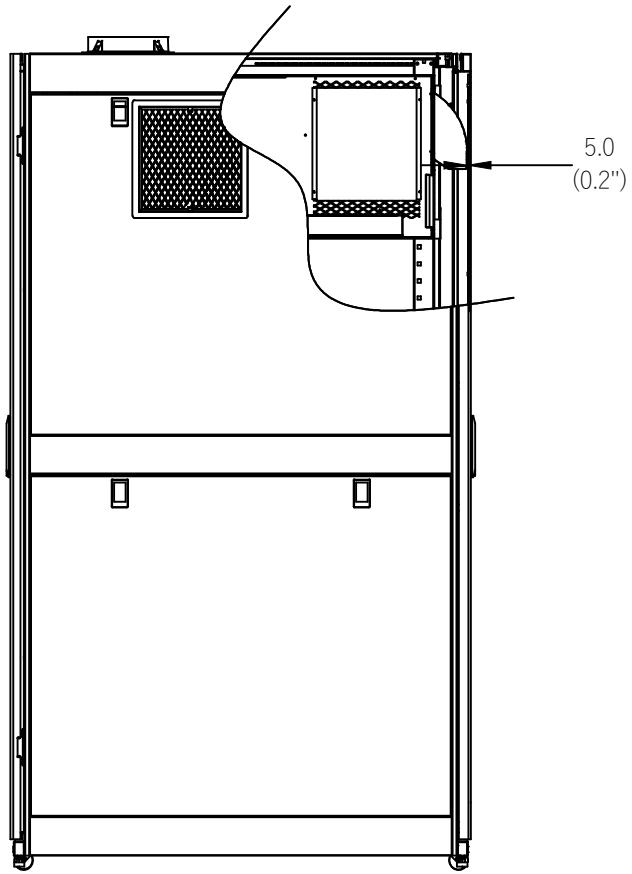

Side View

Notes:

This drawing and its specifications are the property of ENCONNEX and shall not be copied, reproduced, or used in whole or in part, as the basis for the manufacture or sale of items without written permission from ENCONNEX. This drawing is based upon the latest available information and is subject to change without notice.

TOLERANCES LINEAR (mm) X = ± 1 X.X = ± 0.5 X.XX = ± 0.30 X.XXX = ± 0.130 ANGULAR X = 1° .X = 0.5° .XX = 0.25°	MATERIAL:METAL FINISH:	ENCONNEX 4670 AIRCENTER CIRCLE, RENO, NV 89502	PART NUMBER: ECX-ER5M-42U60 DESCRIPTION: EDGERACK 600mm W X 1200mm D X 42U
	DEBUR AND BREAK SHARP EDGES/CORNERS AT 0.2mm MAX	DRAWN BY: SAM DING APPROVED BY: R. FAULKNER	ORG DATE: 2019-05-14 REV DATE: 2019-05-14
UNITS: mm [in]	INTERPRET TO ASME Y14.100	SIZE: A4 SCALE: N/A	SHEET: 3/5 REV: A

Notes/Instructions:

REV	REV DATE	DESCRIPTION	APPROVAL
A	2019-05-14	RELEASE	SD/RF

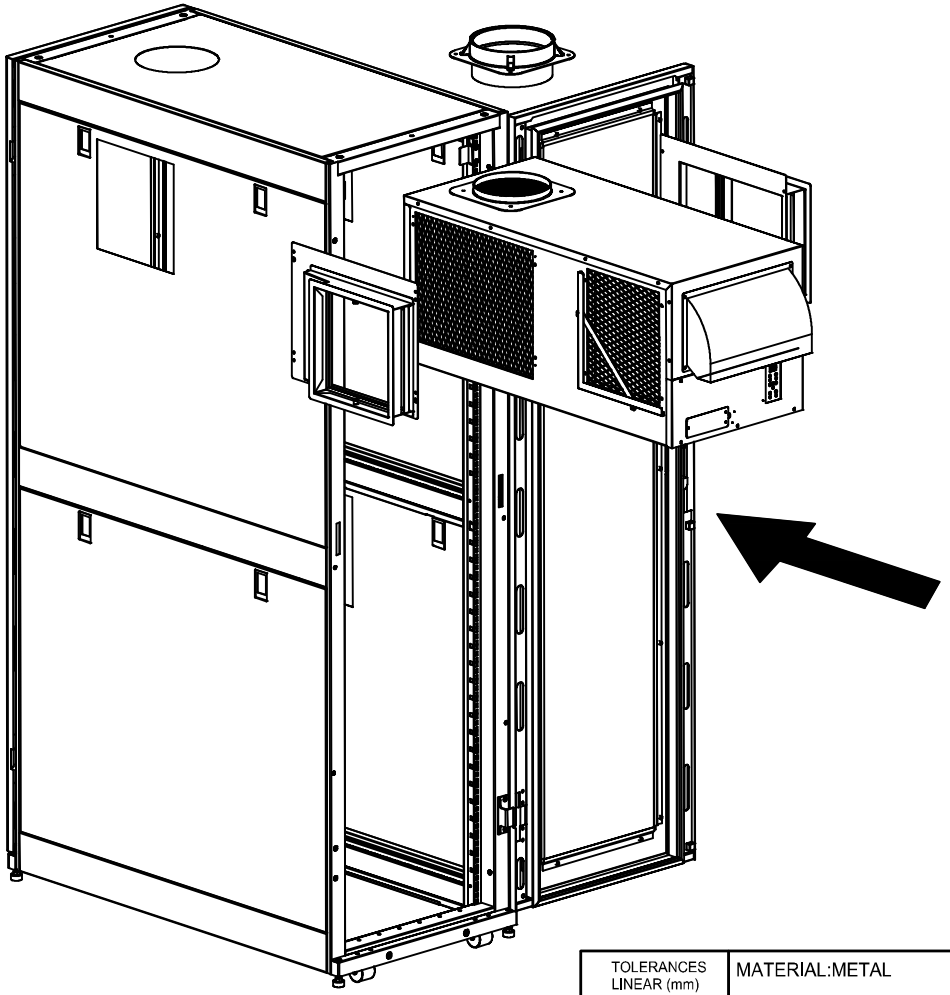

Notes:

This drawing and its specifications are the property of ENCONNEX and shall not be copied, reproduced, or used in whole or in part, as the basis for the manufacture or sale of items without written permission from ENCONNEX. This drawing is based upon the latest available information and is subject to change without notice.

TOLERANCES LINEAR (mm) X = ± 1 X.X = ± 0.5 X.XX = ± 0.30 X.XXX = ± 0.130 ANGULAR X = 1° .X = 0.5° .XX = 0.25°	MATERIAL:METAL FINISH:	ENCONNEX 4670 AIRCENTER CIRCLE, RENO, NV 89502	PART NUMBER: ECX-ER5M-42U60 DESCRIPTION: EDGERACK 600mm W X 1200mm D X 42U
	DEBUR AND BREAK SHARP EDGES/CORNERS AT 0.2mm MAX	DRAWN BY: SAM DING APPROVED BY: R. FAULKNER	ORG DATE: 2019-05-14 REV DATE: 2019-05-14
UNITS: mm [in]	INTERPRET TO ASME Y14.100	SIZE: A4 SCALE: N/A	SHEET: 4/5 REV: A

Notes/Instructions:

REV	REV DATE	DESCRIPTION	APPROVAL
A	2019-05-14	RELEASE	SD/RF

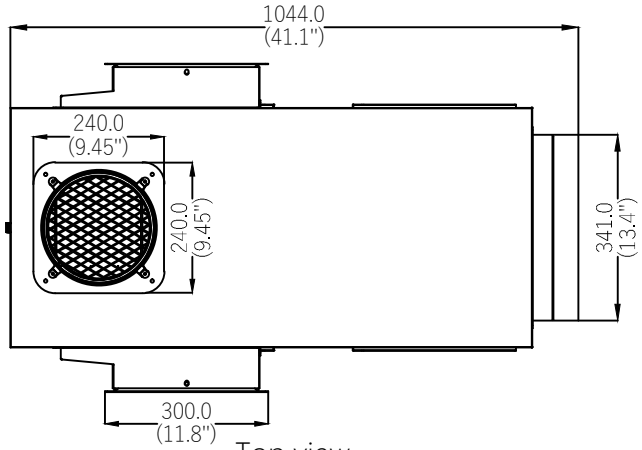

Top view

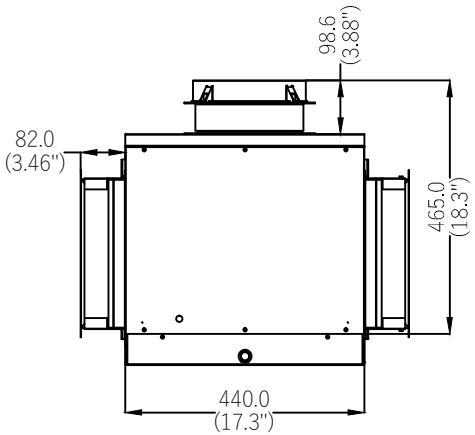

Rear view

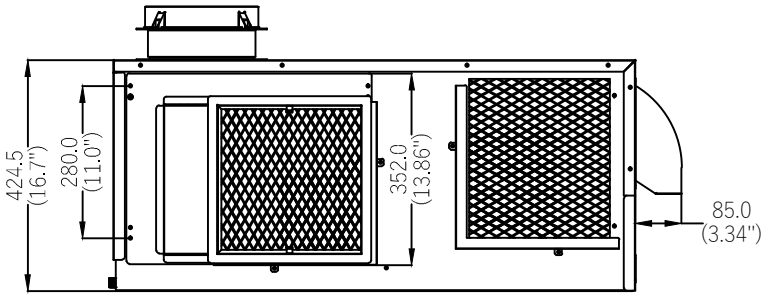

Side view

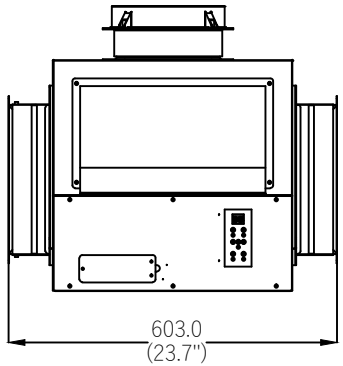

Front view

Notes:

This drawing and its specifications are the property of ENCONNEX and shall not be copied, reproduced, or used in whole or in part, as the basis for the manufacture or sale of items without written permission from ENCONNEX. This drawing is based upon the latest available information and is subject to change without notice.

TOLERANCES LINEAR (mm) X = ± 1 X.X = ± 0.5 X.XX = ± 0.30 X.XXX = ± 0.130 ANGULAR X = 1° .X = 0.5° .XX = 0.25°	MATERIAL:METAL FINISH:	ENCONNEX 4670 AIRCENTER CIRCLE, RENO, NV 89502	PART NUMBER: ECX-ER5M-42U60 DESCRIPTION: RCU (Rack Cooling Unit) 5Kw, 60Hz, 10U rackmount
	DEBUR AND BREAK SHARP EDGES/CORNERS AT 0.2mm MAX	DRAWN BY: SAM DING APPROVED BY: R. FAULKNER	ORG DATE: 2019-05-14 REV DATE: 2019-05-14
UNITS: mm [in]	INTERPRET TO ASME Y14.100	SIZE: A4 SCALE: N/A	SHEET: 5/5 REV: A