Notes/Instructions:

REV	REV DATE	DESCRIPTION	APPROVAL
A	2019-05-14	RELEASE	SD/RF

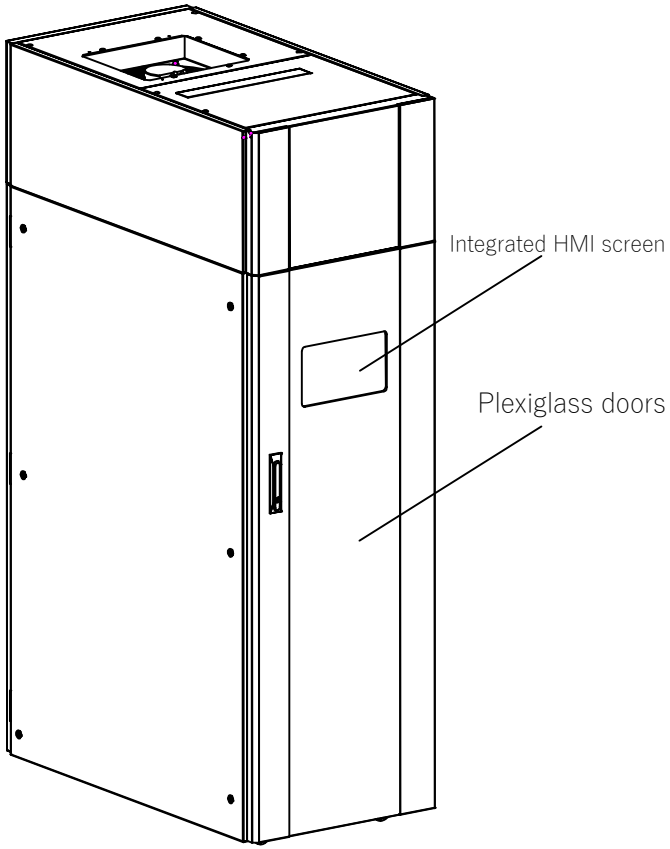

Rear door

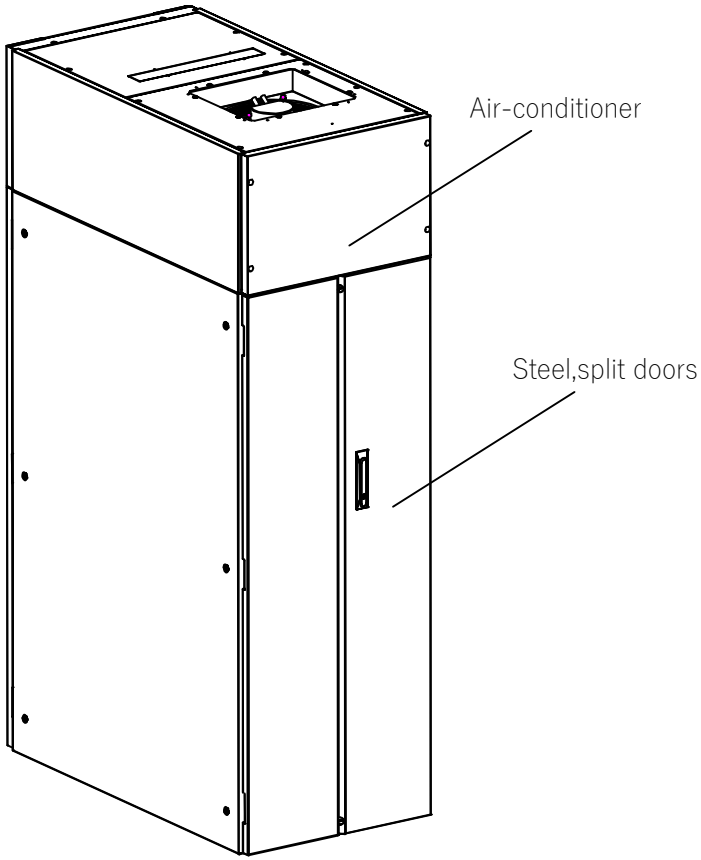

Front door

Notes:

This drawing and its specifications are the property of ENCONNEX and shall not be copied, reproduced, or used in whole or in part, as the basis for the manufacture or sale of items without written permission from ENCONNEX. This drawing is based upon the latest available information and is subject to change without notice.

TOLERANCES LINEAR (mm) X = ± 1 X.X = ± 0.5 X.XX = ± 0.30 X.XXX = ± 0.130 ANGULAR X = 1° .X = 0.5° .XX = 0.25°	MATERIAL:METAL FINISH:	ENCONNEX 4670 AIRCENTER CIRCLE, RENO, NV 89502	PART NUMBER: ECX-ER3P-42UCE DESCRIPTION: EDGERACK ADVANCED 600mm W X 1100mm D X 42U (31U of usable space)
	DEBUR AND BREAK SHARP EDGES/CORNERS AT 0.2mm MAX	DRAWN BY: SAM DING APPROVED BY: R. FAULKNER	ORG DATE: 2019-05-14 REV DATE: 2019-05-14
UNITS: mm [in]	INTERPRET TO ASME Y14.100	SIZE: A4 SCALE: N/A	SHEET: 1/3 REV: A

Notes/Instructions:

REV	REV DATE	DESCRIPTION	APPROVAL
A	2019-05-14	RELEASE	SD/RF

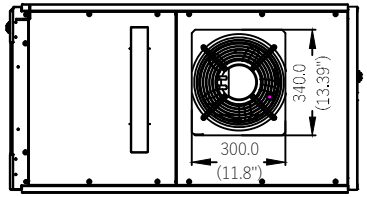

Top View

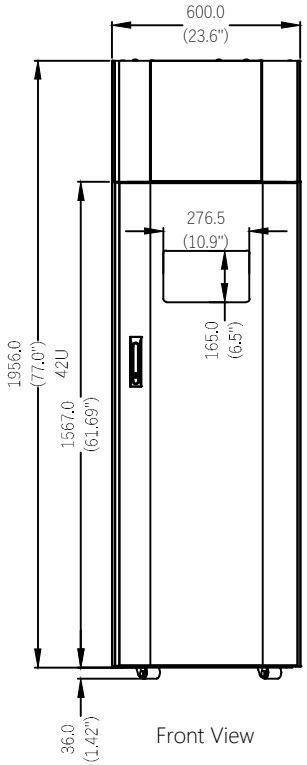

Front View

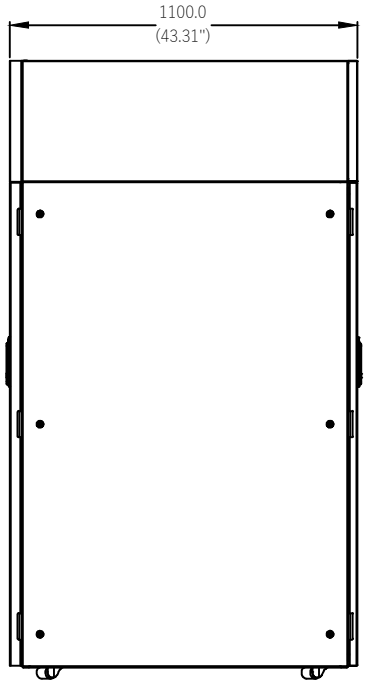

Side View

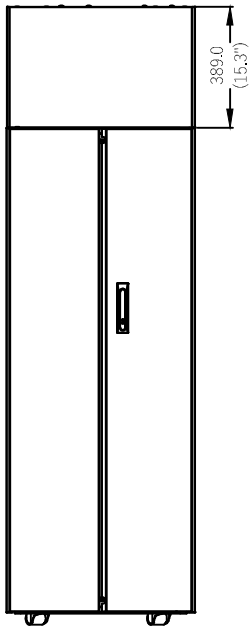

Rear View

Notes:

This drawing and its specifications are the property of ENCONNEX and shall not be copied, reproduced, or used in whole or in part, as the basis for the manufacture or sale of items without written permission from ENCONNEX. This drawing is based upon the latest available information and is subject to change without notice.

TOLERANCES LINEAR (mm) X = ± 1 X.X = ± 0.5 X.XX = ± 0.30 X.XXX = ± 0.130 ANGULAR X = 1° .X = 0.5° .XX = 0.25°	MATERIAL:METAL	ENCONNEX	PART NUMBER: ECX-ER3P-42UCE
	FINISH:	4670 AIRCENTER CIRCLE, RENO, NV 89502	DESCRIPTION: EDGERACK ADVANCED 600mm W X 1100mm D X 42U (31U of usable space)
	DEBUR AND BREAK SHARP EDGES/CORNERS AT 0.2mm MAX	DRAWN BY: SAM DING	ORG DATE: 2019-05-14
		APPROVED BY: R. FAULKNER	REV DATE: 2019-05-14
UNITS: mm [in]	INTERPRET TO ASME Y14.100	SIZE: A4 / SCALE: N/A	SHEET: 2/3 / REV: A

Notes/Instructions:

REV	REV DATE	DESCRIPTION	APPROVAL
A	2019-05-14	RELEASE	SD/RF

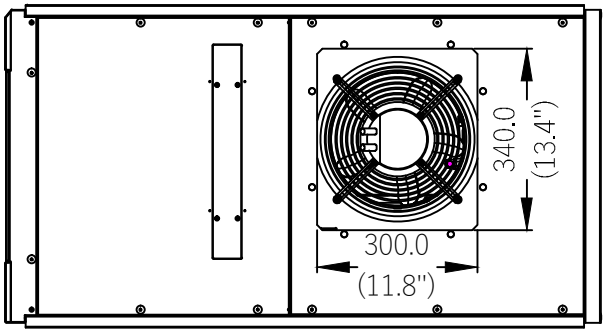

Top View

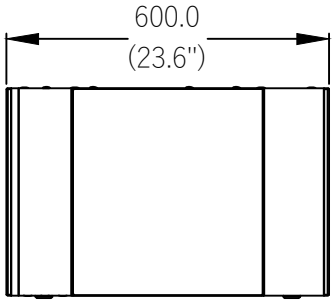

Front View

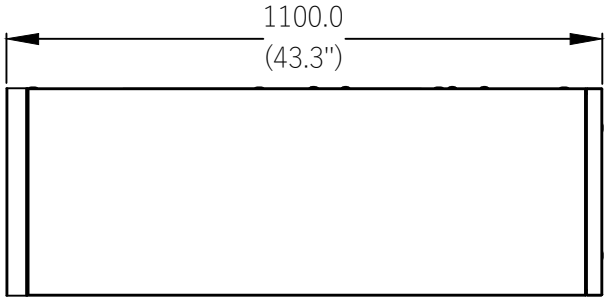

Side View

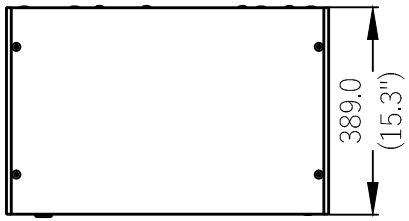

Rear View

Notes:

This drawing and its specifications are the property of ENCONNEX and shall not be copied, reproduced, or used in whole or in part, as the basis for the manufacture or sale of items without written permission from ENCONNEX. This drawing is based upon the latest available information and is subject to change without notice.

TOLERANCES LINEAR (mm) X = ± 1 X.X = ± 0.5 X.XX = ± 0.30 X.XXX = ± 0.130 ANGULAR X = 1° .X = 0.5° .XX = 0.25°	MATERIAL:METAL	ENCONNEX	PART NUMBER: ECX-ER3P-42UCE
	FINISH:	4670 AIRCENTER CIRCLE, RENO, NV 89502	DESCRIPTION: RCU (Rack Cooling Unit) 3kW, 50Hz, 10U top-mount
	DEBUR AND BREAK SHARP EDGES/CORNERS AT 0.2mm MAX	DRAWN BY: SAM DING	ORG DATE: 2019-05-14
		APPROVED BY: R. FAULKNER	REV DATE: 2019-05-14
UNITS: mm [in]	INTERPRET TO ASME Y14.100	SIZE: A4 / SCALE: N/A	SHEET: 3/3 / REV: A