THIS DRAWING AND SPECIFICATIONS HEREIN ARE THE PROPERTY OF ENCONNEX LLC. AND SHALL NOT BE COPIED, REPRODUCED OR USED IN WHOLE OR IN PART, AS THE BASIS FOR THE MANUFACTURE OR SALE OF ITEMS WITHOUT THE WRITTEN PERMISSION OF ENCONNEX LLC. THIS DRAWING IS SUBJECT TO CHANGE WITHOUT NOTICE.

REVISIONS

REV.	SUFFIX	DESCRIPTION	DATE	APPROVED
A		Full Release	2020-05-18	FANCY FAN

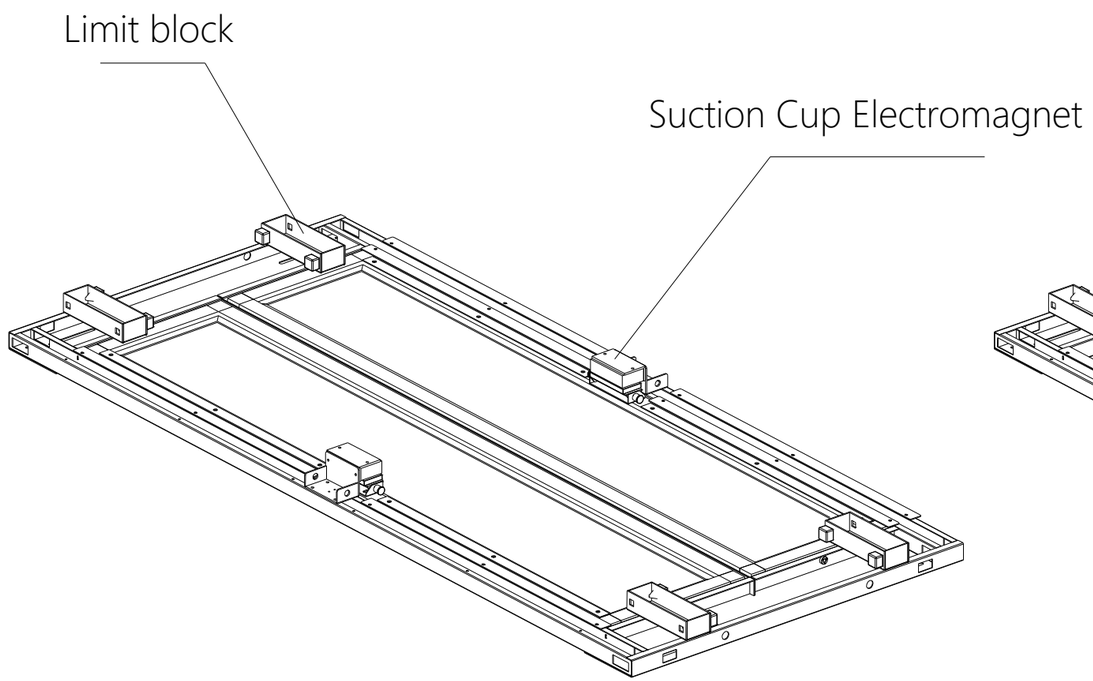

CLOSED

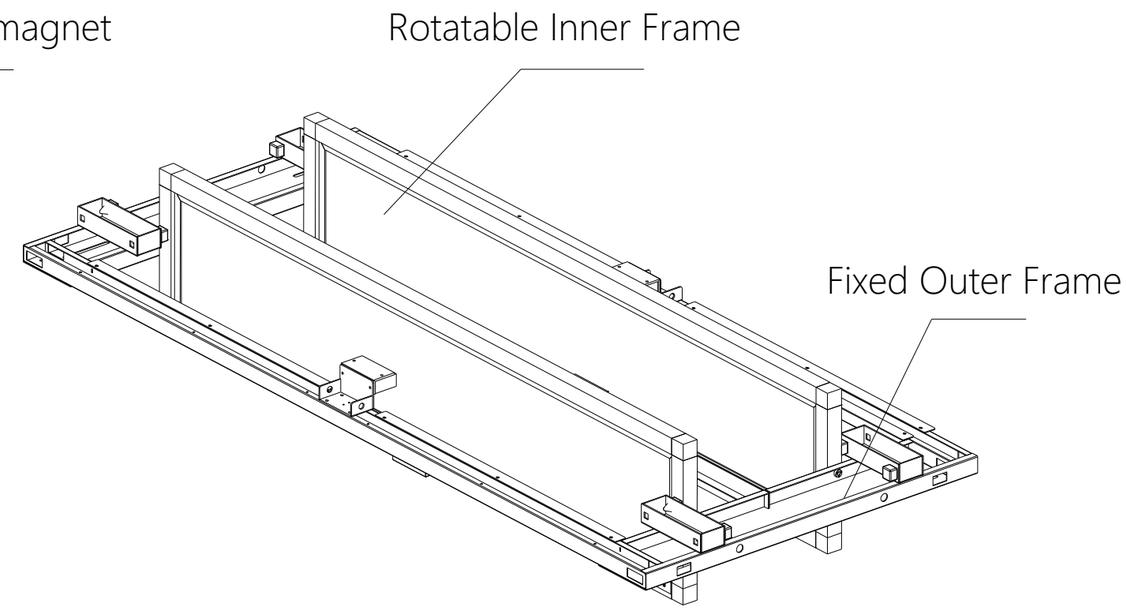

OPEN

NOTES, UNLESS OTHERWISE SPECIFIED:

1. MATERIAL: SEE INDIVIDUAL MARK
2. FINISH: RAL9005 TEXTURE POWDER COATING
3. PART MUST BE SUFFICIENTLY FREE OF BURRS AND SHARP EDGES TO PASS UL 1439 SHARP EDGE TEST.
4. 3D CAD AVAILABLE IN ADDITION TO PDF PRINT. SHOULD DISCREPANCY ARISE, CONSULT ENCONNEX ENGINEERING IMMEDIATELY.
5. ALL PARTS TO BE FREE OF DIRT OR GRIME THAT PREVENTS LABEL ADHESION OR ALLOWS TRANSFER ONTO COSMETIC AREAS.
6. MUST BE ROHS COMPLIANT, INCLUDING HARDWARE. IF CONFLICTING SPECIFICATIONS EXIST, CONTACT ENCONNEX ENGINEERING.
7. DIMENSIONS IDENTIFIED WITH (X.XX) ARE CONSIDERED CRITICAL TO QUALITY (CTQ) DIMENSIONS. THESE DIMENSIONS ARE EXPECTED TO BE MONITORED STATISTICALLY AND DOCUMENTED AS PART OF THE FABRICATION PROCESS.

UNLESS NOTED, DIMENSIONS IN MILLIMETERS & TOLERANCES ARE:

X.	± 1 MM	X°	± 1°
X.X	± 0.5 MM	X.X°	± 0.5°
X.XX	± 0.20 MM		
ØX.X	± 0.3 MM		
ØX.XX	± 0.10 MM		

ENCONNEX
4670 AIRCENTER CIRCLE, RENO, NV89502

PRODUCT LINE: Containment Tilt Window

PART NUMBER: ECX-612-SPLIT-TLT-CLG-001

DESCRIPTION: Containment Tilt Window 600mm W x 1200mm D

THIRD ANGLE PROJECTION

DRAWING FILE NAME: ECX-612-SPLIT-TLT-CLG-001	ENGINEER: FANCY.FAN	ORG DATE: 2020-05-18
3D MODEL FILE NAME: ECX-612-SPLIT-TLT-CLG-001	DRAWN: SAM.DING	REV DATE: 2020-05-18
3D MODEL CONFIGURATION: Default	ITEM WEIGHT (REFERENCE ONLY)	REV: A

UNITS:MM[IN] | INTERPRET TO ASME Y14.100 | SIZE: B | SCALE:N/A | DO NOT SCALE DRAWING | SHEET: 1/5

THIS DRAWING AND SPECIFICATIONS HEREIN ARE THE PROPERTY OF ENCONNEX LLC. AND SHALL NOT BE COPIED, REPRODUCED OR USED IN WHOLE OR IN PART, AS THE BASIS FOR THE MANUFACTURE OR SALE OF ITEMS WITHOUT THE WRITTEN PERMISSION OF ENCONNEX LLC. THIS DRAWING IS SUBJECT TO CHANGE WITHOUT NOTICE.

REVISIONS

REV.	SUFFIX	DESCRIPTION	DATE	APPROVED
A		Full Release	2020-05-18	FANCY FAN

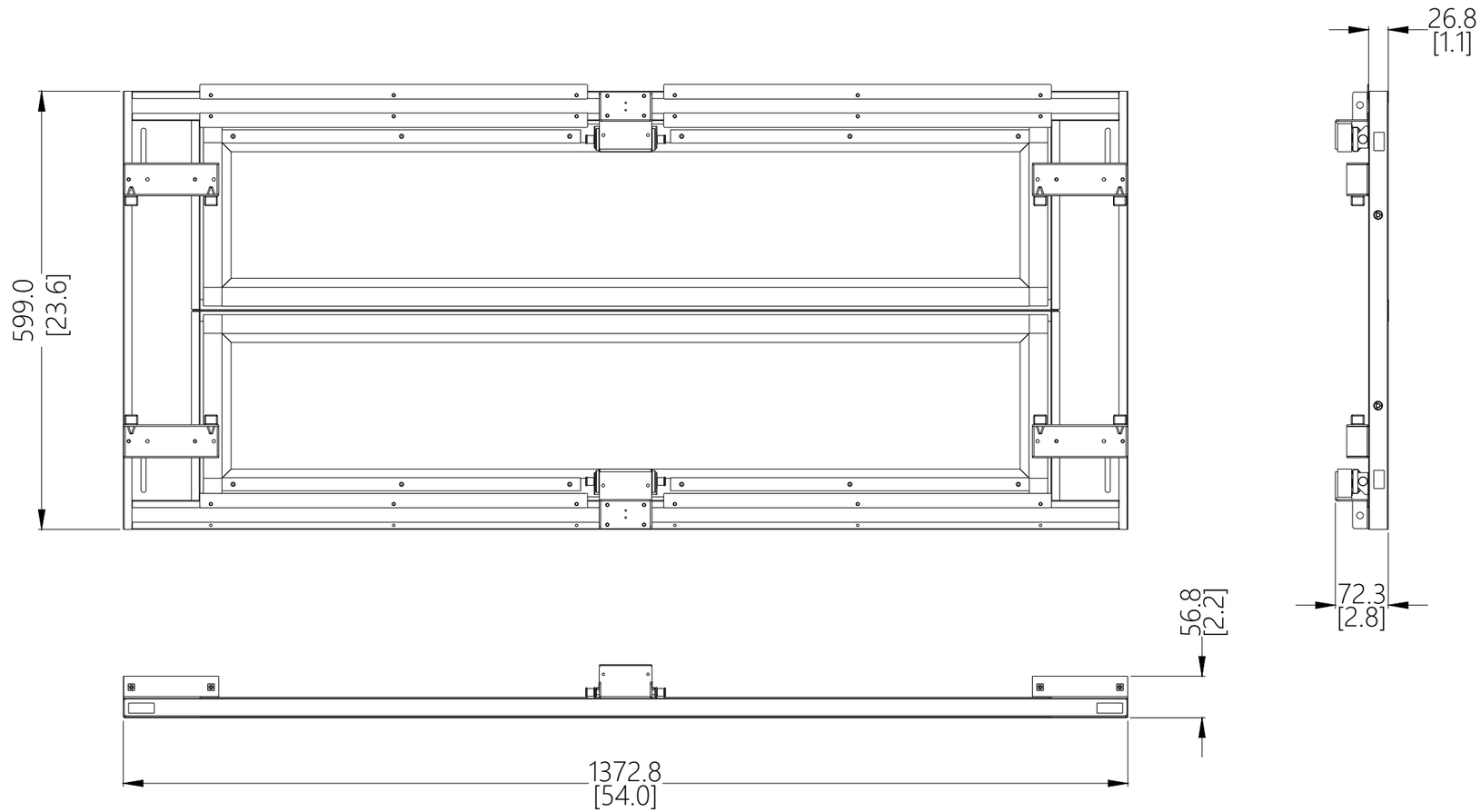

NOTES, UNLESS OTHERWISE SPECIFIED:

1. MATERIAL: SEE INDIVIDUAL MARK
2. FINISH: RAL9005 TEXTURE POWDER COATING
3. PART MUST BE SUFFICIENTLY FREE OF BURRS AND SHARP EDGES TO PASS UL 1439 SHARP EDGE TEST.
4. 3D CAD AVAILABLE IN ADDITION TO PDF PRINT. SHOULD DISCREPANCY ARISE, CONSULT ENCONNEX ENGINEERING IMMEDIATELY.
5. ALL PARTS TO BE FREE OF DIRT OR GRIME THAT PREVENTS LABEL ADHESION OR ALLOWS TRANSFER ONTO COSMETIC AREAS.
6. MUST BE ROHS COMPLIANT, INCLUDING HARDWARE. IF CONFLICTING SPECIFICATIONS EXIST, CONTACT ENCONNEX ENGINEERING.
7. DIMENSIONS IDENTIFIED WITH (X.XX) ARE CONSIDERED CRITICAL TO QUALITY (CTQ) DIMENSIONS. THESE DIMENSIONS ARE EXPECTED TO BE MONITORED STATISTICALLY AND DOCUMENTED AS PART OF THE FABRICATION PROCESS.

UNLESS NOTED, DIMENSIONS IN MILLIMETERS & TOLERANCES ARE:

X.	± 1 MM	X°	± 1°
X.X	± 0.5 MM	X.X°	± 0.5°
X.XX	± 0.20 MM		
ØX.X	± 0.3 MM		
ØX.XX	± 0.10 MM		

ENCONNEX

4670 AIRCENTER CIRCLE, RENO, NV89502

PRODUCT LINE: Containment Tilt Window

PART NUMBER: ECX-612-SPLIT-TLT-CLG-001

DESCRIPTION: Containment Tilt Window 600mm W x 1200mm D

THIRD ANGLE PROJECTION

DRAWING FILE NAME ECX-612-SPLIT-TLT-CLG-001	ENGINEER: FANCY.FAN	ORG DATE: 2020-05-18
3D MODEL FILE NAME ECX-612-SPLIT-TLT-CLG-001	DRAWN: SAM.DING	REV DATE: 2020-05-18
3D MODEL CONFIGURATION Default	ITEM WEIGHT (REFERENCE ONLY)	REV: A

UNITS:MM[IN] | INTERPRET TO ASME Y14.100 | SIZE: B | SCALE:N/A | DO NOT SCALE DRAWING | SHEET: 2/5

THIS DRAWING AND SPECIFICATIONS HEREIN ARE THE PROPERTY OF ENCONNEX LLC. AND SHALL NOT BE COPIED, REPRODUCED OR USED IN WHOLE OR IN PART, AS THE BASIS FOR THE MANUFACTURE OR SALE OF ITEMS WITHOUT THE WRITTEN PERMISSION OF ENCONNEX LLC. THIS DRAWING IS SUBJECT TO CHANGE WITHOUT NOTICE.

REVISIONS

REV.	SUFFIX	DESCRIPTION	DATE	APPROVED
A		Full Release	2020-05-18	FANCY FAN

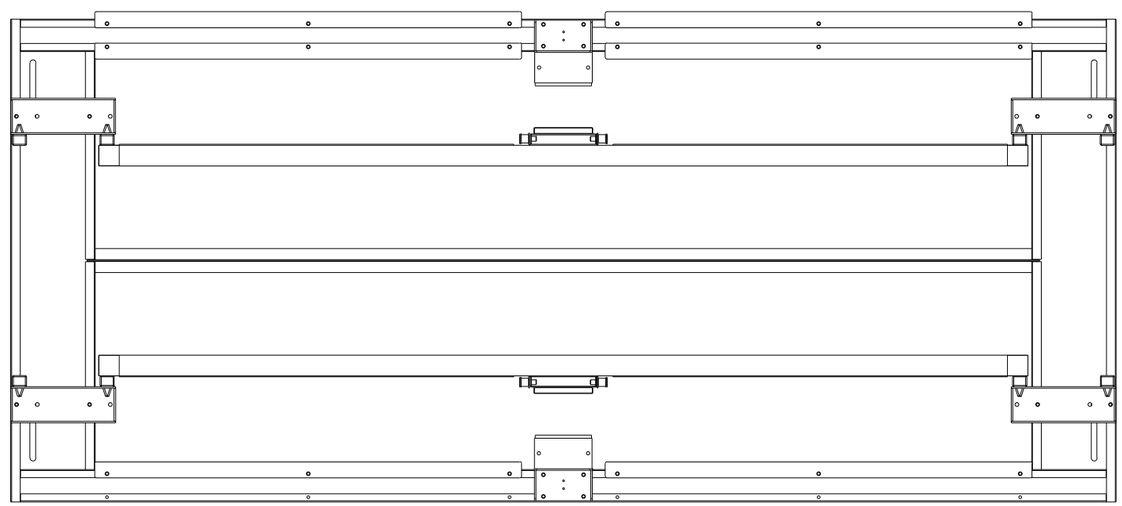

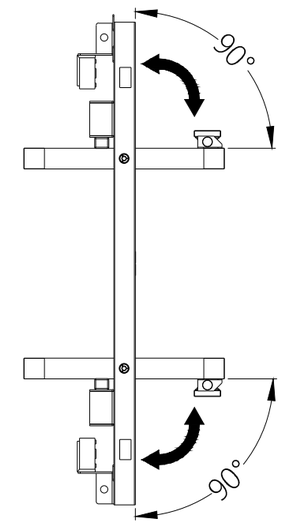

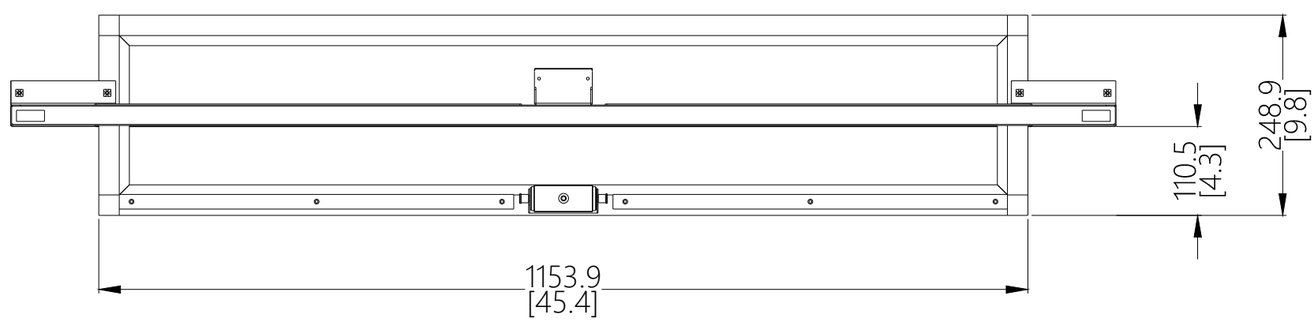

NOTES, UNLESS OTHERWISE SPECIFIED:

1. MATERIAL: SEE INDIVIDUAL MARK
2. FINISH: RAL9005 TEXTURE POWDER COATING
3. PART MUST BE SUFFICIENTLY FREE OF BURRS AND SHARP EDGES TO PASS UL 1439 SHARP EDGE TEST.
4. 3D CAD AVAILABLE IN ADDITION TO PDF PRINT. SHOULD DISCREPANCY ARISE, CONSULT ENCONNEX ENGINEERING IMMEDIATELY.
5. ALL PARTS TO BE FREE OF DIRT OR GRIME THAT PREVENTS LABEL ADHESION OR ALLOWS TRANSFER ONTO COSMETIC AREAS.
6. MUST BE ROHS COMPLIANT, INCLUDING HARDWARE. IF CONFLICTING SPECIFICATIONS EXIST, CONTACT ENCONNEX ENGINEERING.
7. DIMENSIONS IDENTIFIED WITH (X.XX) ARE CONSIDERED CRITICAL TO QUALITY (CTQ) DIMENSIONS. THESE DIMENSIONS ARE EXPECTED TO BE MONITORED STATISTICALLY AND DOCUMENTED AS PART OF THE FABRICATION PROCESS.

UNLESS NOTED, DIMENSIONS IN MILLIMETERS & TOLERANCES ARE:

X.	± 1 MM	X°	± 1°
X.X	± 0.5 MM	X.X°	± 0.5°
X.XX	± 0.20 MM		
ØX.X	± 0.3 MM		
ØX.XX	± 0.10 MM		

ENCONNEX

4670 AIRCENTER CIRCLE, RENO, NV89502

PRODUCT LINE: Containment Tilt Window

PART NUMBER: ECX-612-SPLIT-TLT-CLG-001

DESCRIPTION: Containment Tilt Window 600mm W x 1200mm D

THIRD ANGLE PROJECTION

DRAWING FILE NAME ECX-612-SPLIT-TLT-CLG-001	ENGINEER: FANCY.FAN	ORG DATE: 2020-05-18
3D MODEL FILE NAME ECX-612-SPLIT-TLT-CLG-001	DRAWN: SAM.DING	REV DATE: 2020-05-18
3D MODEL CONFIGURATION Default	ITEM WEIGHT (REFERENCE ONLY)	REV: A

UNITS:MM[IN] | INTERPRET TO ASME Y14.100 | SIZE: B | SCALE:N/A | DO NOT SCALE DRAWING | SHEET: 3/5

THIS DRAWING AND SPECIFICATIONS HEREIN ARE THE PROPERTY OF ENCONNEX LLC. AND SHALL NOT BE COPIED, REPRODUCED OR USED IN WHOLE OR IN PART, AS THE BASIS FOR THE MANUFACTURE OR SALE OF ITEMS WITHOUT THE WRITTEN PERMISSION OF ENCONNEX LLC. THIS DRAWING IS SUBJECT TO CHANGE WITHOUT NOTICE.

REVISIONS

REV.	SUFFIX	DESCRIPTION	DATE	APPROVED
A		Full Release	2020-05-18	FANCY FAN

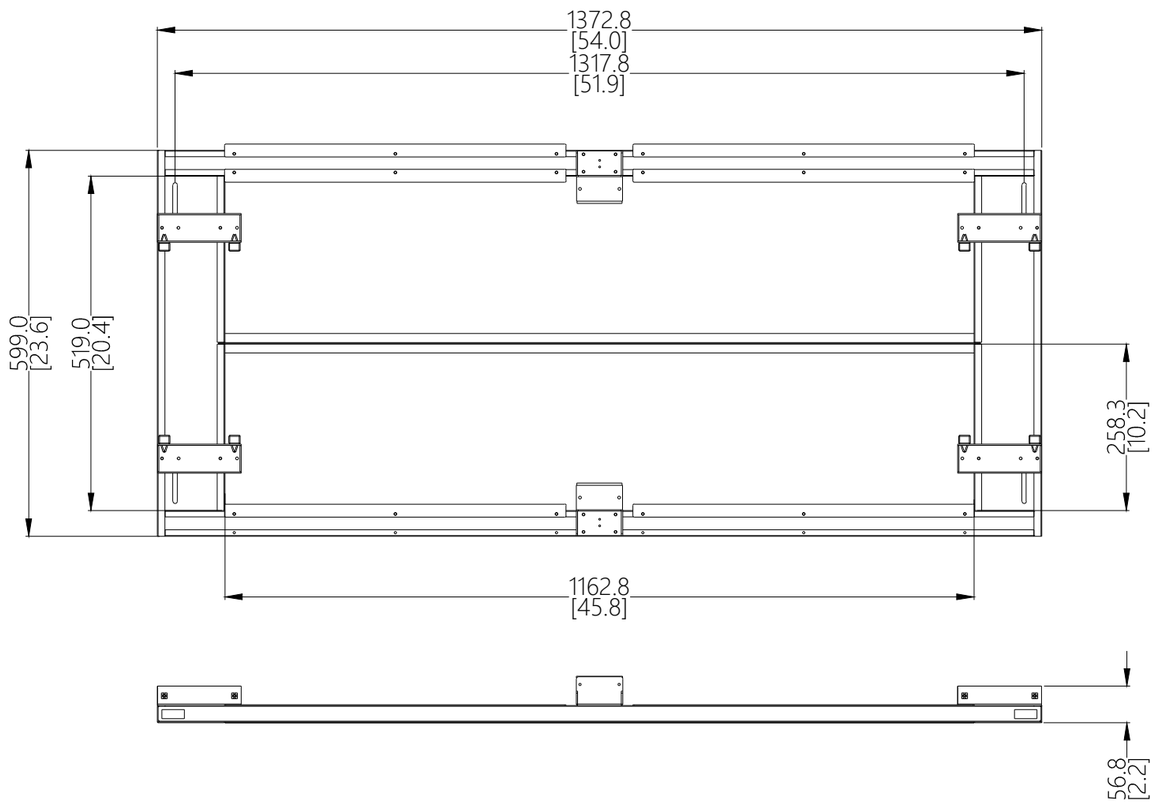

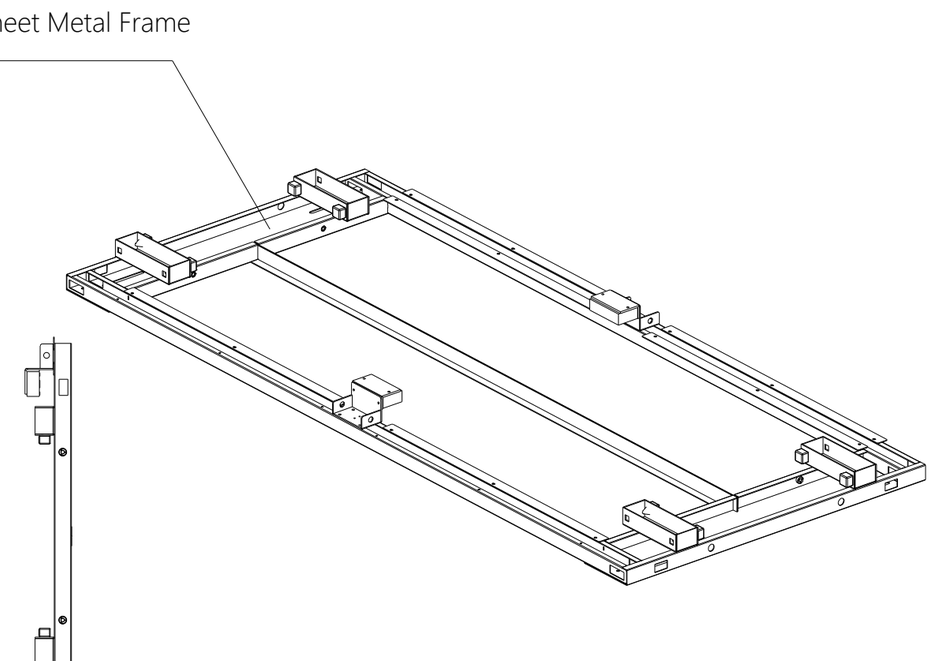

NOTES, UNLESS OTHERWISE SPECIFIED:

1. MATERIAL: SEE MACKED
2. FINISH: RAL9005 TEXTURE POWDER COATING
3. PART MUST BE SUFFICIENTLY FREE OF BURRS AND SHARP EDGES TO PASS UL 1439 SHARP EDGE TEST.
4. 3D CAD AVAILABLE IN ADDITION TO PDF PRINT. SHOULD DISCREPANCY ARISE, CONSULT ENCONNEX ENGINEERING IMMEDIATELY.
5. ALL PARTS TO BE FREE OF DIRT OR GRIME THAT PREVENTS LABEL ADHESION OR ALLOWS TRANSFER ONTO COSMETIC AREAS.
6. MUST BE ROHS COMPLIANT, INCLUDING HARDWARE. IF CONFLICTING SPECIFICATIONS EXIST, CONTACT ENCONNEX ENGINEERING.
7. DIMENSIONS IDENTIFIED WITH (X.XX) ARE CONSIDERED CRITICAL TO QUALITY (CTQ) DIMENSIONS. THESE DIMENSIONS ARE EXPECTED TO BE MONITORED STATISTICALLY AND DOCUMENTED AS PART OF THE FABRICATION PROCESS.

UNLESS NOTED, DIMENSIONS IN MILLIMETERS & TOLERANCES ARE:

X.	± 1 MM	X°	± 1°
X.X	± 0.5 MM	X.X°	± 0.5°
X.XX	± 0.20 MM		
ØX.X	± 0.3 MM		
ØX.XX	± 0.10 MM		

ENCONNEX
4670 AIRCENTER CIRCLE, RENO, NV89502

PRODUCT LINE: Containment Tilt Window

PART NUMBER: ECX-612-SPLIT-TLT-CLG-001

DESCRIPTION: Containment Tilt Window 600mm W x 1200mm D

THIRD ANGLE PROJECTION

DRAWING FILE NAME: ECX-612-SPLIT-TLT-CLG-001	ENGINEER: FANCY.FAN	ORG DATE: 2020-05-18
3D MODEL FILE NAME: ECX-612-SPLIT-TLT-CLG-001	DRAWN: SAM.DING	REV DATE: 2020-05-18
3D MODEL CONFIGURATION: Default	ITEM WEIGHT (REFERENCE ONLY)	REV: A

UNITS:MM[IN] | INTERPRET TO ASME Y14.100 | SIZE: B | SCALE:N/A | DO NOT SCALE DRAWING | SHEET: 4/5

THIS DRAWING AND SPECIFICATIONS HEREIN ARE THE PROPERTY OF ENCONNEX LLC. AND SHALL NOT BE COPIED, REPRODUCED OR USED IN WHOLE OR IN PART, AS THE BASIS FOR THE MANUFACTURE OR SALE OF ITEMS WITHOUT THE WRITTEN PERMISSION OF ENCONNEX LLC. THIS DRAWING IS SUBJECT TO CHANGE WITHOUT NOTICE.

REVISIONS

REV.	SUFFIX	DESCRIPTION	DATE	APPROVED
A		Full Release	2020-05-18	FANCY FAN

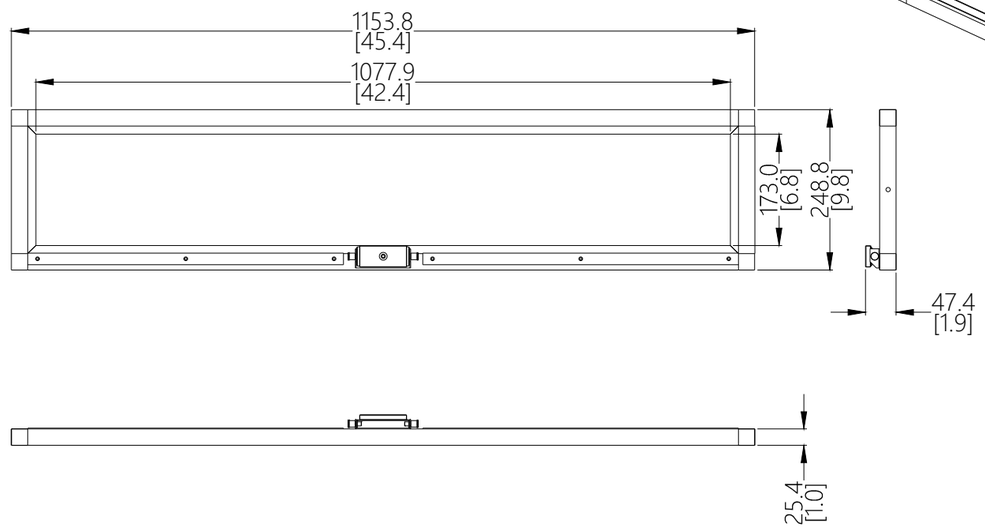

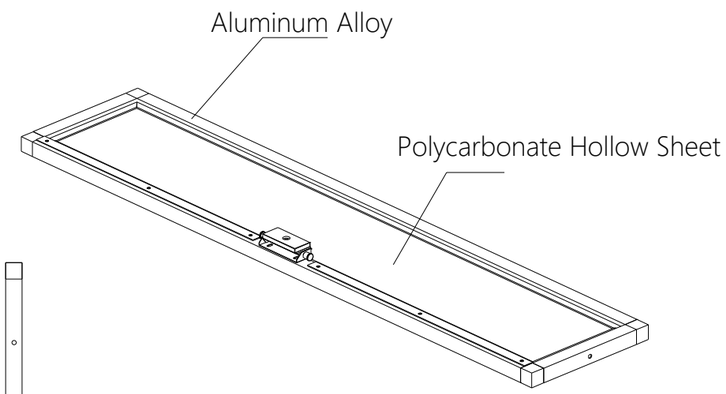

NOTES, UNLESS OTHERWISE SPECIFIED:

1. MATERIAL: SEE MACKED
2. FINISH: RAL9005 TEXTURE POWDER COATING
3. PART MUST BE SUFFICIENTLY FREE OF BURRS AND SHARP EDGES TO PASS UL 1439 SHARP EDGE TEST.
4. 3D CAD AVAILABLE IN ADDITION TO PDF PRINT. SHOULD DISCREPANCY ARISE, CONSULT ENCONNEX ENGINEERING IMMEDIATELY.
5. ALL PARTS TO BE FREE OF DIRT OR GRIME THAT PREVENTS LABEL ADHESION OR ALLOWS TRANSFER ONTO COSMETIC AREAS.
6. MUST BE ROHS COMPLIANT, INCLUDING HARDWARE. IF CONFLICTING SPECIFICATIONS EXIST, CONTACT ENCONNEX ENGINEERING.
7. DIMENSIONS IDENTIFIED WITH (X.XX) ARE CONSIDERED CRITICAL TO QUALITY (CTQ) DIMENSIONS. THESE DIMENSIONS ARE EXPECTED TO BE MONITORED STATISTICALLY AND DOCUMENTED AS PART OF THE FABRICATION PROCESS.

UNLESS NOTED, DIMENSIONS IN MILLIMETERS & TOLERANCES ARE:

X.	± 1 MM	X°	± 1°
X.X	± 0.5 MM	X.X°	± 0.5°
X.XX	± 0.20 MM		
ØX.X	± 0.3 MM		
ØX.XX	± 0.10 MM		

ENCONNEX

4670 AIRCENTER CIRCLE, RENO, NV89502

PRODUCT LINE: Containment Tilt Window

PART NUMBER: ECX-612-SPLIT-TLT-CLG-001

DESCRIPTION: Containment Tilt Window 600mm W x 1200mm D

THIRD ANGLE PROJECTION

DRAWING FILE NAME: ECX-612-SPLIT-TLT-CLG-001	ENGINEER: FANCY.FAN	ORG DATE: 2020-05-18
3D MODEL FILE NAME: ECX-612-SPLIT-TLT-CLG-001	DRAWN: SAM.DING	REV DATE: 2020-05-18
3D MODEL CONFIGURATION: Default	ITEM WEIGHT (REFERENCE ONLY)	REV: A

UNITS:MM[IN] | INTERPRET TO ASME Y14.100 | SIZE: B | SCALE:N/A | DO NOT SCALE DRAWING | SHEET: 5/5